POWERSPORTS

OWNER'S MANUAL

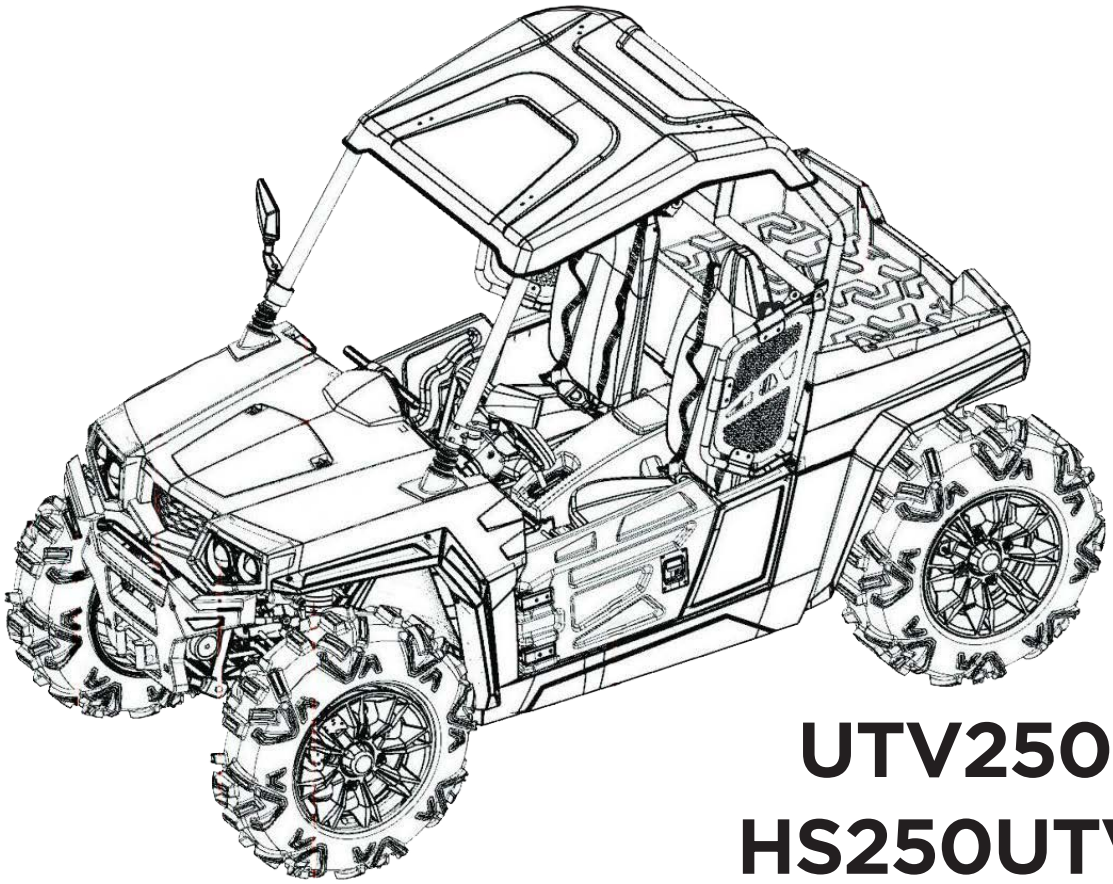

UTV250
HS250UTV

READ THIS MANUAL CAREFULLY!

Provincial / Municipal governments have different regulations pertaining to owning and operating an off-road vehicle, learn the regulations in your area.

(888)-405-8725

1775 E. University Dr. Tempe AZ. 85281

www.colemanpowersportsusa.com

062920

WARNING

Operating, servicing and maintaining a passenger vehicle or off-road vehicle can expose you to chemicals including engine exhaust , carbon monoxide, phthalates, and lead, which are known to the state of California to cause cancer and birth defects or other reproductive harm. To minimize exposure, avoid breathing exhaust, do not idle the engine except as necessary, service your vehicle in a well-ventilated area and wear gloves or wash your hands frequently when servicing your vehicle. For more information go to www.P65Warnings.ca.gov/-passenger-vehicle

Introduction 250cc Sport

INTRODUCTION

Congratulations on your purchase of the 250cc Sport. This Owner's / Operator's manual will provide you information regarding safe operation, operational instructions, maintenance and care. Fully understanding this manual and following all of the instructions herein will provide the knowledge needed to have safe and enjoyable UTV operation.

For questions regarding this UTV, please call 888-405-8725.

IMPORTANT SAFETY MESSAGES

- **READ THIS MANUAL CAREFULLY AND COMPLETELY BEFORE OPERATING YOUR UTV. MAKE SURE YOU UNDERSTAND ALL INSTRUCTIONS.**
- **PAY CLOSE ATTENTION TO THE WARNING AND CAUTION LABELS ON THE UTV.**
- **NEVER OPERATE THE UTV WITHOUT PROPER TRAINING OR INSTRUCTION.**
- **THIS UTV SHOULD NOT BE RIDDEN BY ANYONE UNDER 12 YEARS OF AGE.**

Introduction 250cc Sport

IMPORTANT MANUAL INFORMATION

FAILURE TO FOLLOW THE WARNINGS CONTAINED IN THIS MANUAL CAN RESULT IN SERIOUS INJURY
OR DEATH. Particularly important information is distinguished in this manual by the following notations:

The Safety Alert Symbol means **ATTENTION!**
YOUR SAFETY IS INVOLVED!

WARNING Failure to follow **WARNING** instructions could result in severe injury or death to the machine operator, bystander or a person inspecting or repairing the machine.

CAUTION: **A CAUTION** indicates special precautions that must be taken to avoid damage to the machine.

NOTE: **A NOTE** provides key information to make procedures easier to understand**.**

WARNING

An add-on or modified part must be compliant with applicable ARB evaporative emission control standards. A violation of this requirement is punishable by civil and/or criminal punishment.

Introduction 250cc Sport

IMPORTANT NOTICE

This UTV is designed and manufactured for **OFF - ROAD** use only. It is illegal and unsafe to operate this UTV on any public street, road or highway.

This UTV complies with all applicable **OFF - ROAD** noise level and spark arrestor laws and regulations in effect at the time of manufacture.

Please check your local riding laws and regulations before operating this UTV.

When the temperature is below -4°F (-20°C), park the UTV in a place where the temperature is higher than -4°F (-20°C). Start the UTV after the UTV has warmed up. Please see page 7-3 on the warming up process.

Follow the proper parking procedures when the temperature is higher than 100°F (38°C): turn off the engine; make sure the radiator fan is on for 3 minutes before turning off the power switch.

Starting the UTV for the first time will take longer because the fuel will need reach the fuel injectors. To start the UTV the first time, hold the ignition key on at 5-second intervals. Allow the starter to rest 15 seconds between each start attempt.

COLEMAN POWERSPORTS LIMITED WARRANTY

This Warranty is NOT the Emissions Control Warranty Please note this is a general Limited Warranty for this product. It IS NOT an Emissions Control Warranty. Please see the Emissions Control Warranty in this manual for warranties covering Emission components. The Emissions Control Warranty can be found in section 13 of this manual.

Coleman Powersports offers the following warranty to the initial purchaser of this new Coleman Powersports product. The initial purchaser is defined as the first person to purchase a new Coleman Powersports product from an Authorized Retailer of Coleman Powersports products.

The limited warranty period for this product is 1 year from the date of purchase shown on the original sales receipt.

What is a Defect? The Product is warranted to be free from manufacturing defects in material and workmanship for a period of 1 year from the date of purchase shown on the sales receipt. During this period of time Coleman Powersports will, at its option, either repair or replace any original Coleman Powersports part which is covered by this warranty and is proven to be defective in workmanship or material.

To qualify for this warranty the part:

1. Must have been purchased from Coleman Powersports or from an authorized Coleman Powersports Retailer.
2. This warranty does not apply to any vehicle which is used in competition or used in a manner not consistent with the normal and proper intended use for the vehicle. This vehicle is not intended for rental or commercial use.

Who Can Perform Repairs Under this Warranty?
Repairs under this warranty should be performed by an authorized Coleman Powersports retailer or comparable servicing dealer.

How to get service under this warranty
To get warranty service call Coleman Powersports at 888-405-8725 for the location of your local servicing retailer / dealer. Please do not return the product to the retailer where the product was purchased unless instructed to do so by Coleman Powersports. The retailer of this product does not make any warranty of its own and has no authority to implement this warranty on behalf of Coleman Powersports without the approval of Coleman Powersports. A COPY OF YOUR SALES RECEIPT IS REQUIRED FOR WARRANTY SERVICE.

What this Warranty Does Not Cover

This warranty does not cover the following

1. Damage due to lack or improper maintenance as described in this manual.
2. Damage which is caused by normal use and not caused by a defect in materials or workmanship.
3. Use of the product which is not consistent with the intended use as described in the operating instructions.
4. Any expendable maintenance item which need replacement or service as part of normal maintenance, unless such items have defects in material or workmanship which cause failure or premature wear.
5. Any product which has been altered or modified in a manner not consistent with the original design of the product or in a manner not approved by Coleman Powersports.
6. Tires

7. Damage or failures due to abuse, neglect, or misuse of the product.

Limitations of this Warranty

This warranty does not cover and Coleman Powersports disclaims any responsibility for

1. Loss of time or loss of use of the product.
2. Transportation costs to and from the authorized service center.
3. Other loss or damage to other equipment or personal items.

Length of Implied Warranties

Any implied warranties are limited to the duration set forth in this warranty. Coleman Powersports does not make any claim as to the merchantability or fitness for a particular purpose which would extend longer than the duration of this written warranty.

Check your State Laws as some State Laws do not allow limitations as to the duration of an implied warranty. Some States may also not allow limitation or exclusions based on incidental or consequential damages.

Introduction 250cc Sport

Table of Contents

Introduction 250cc Sport

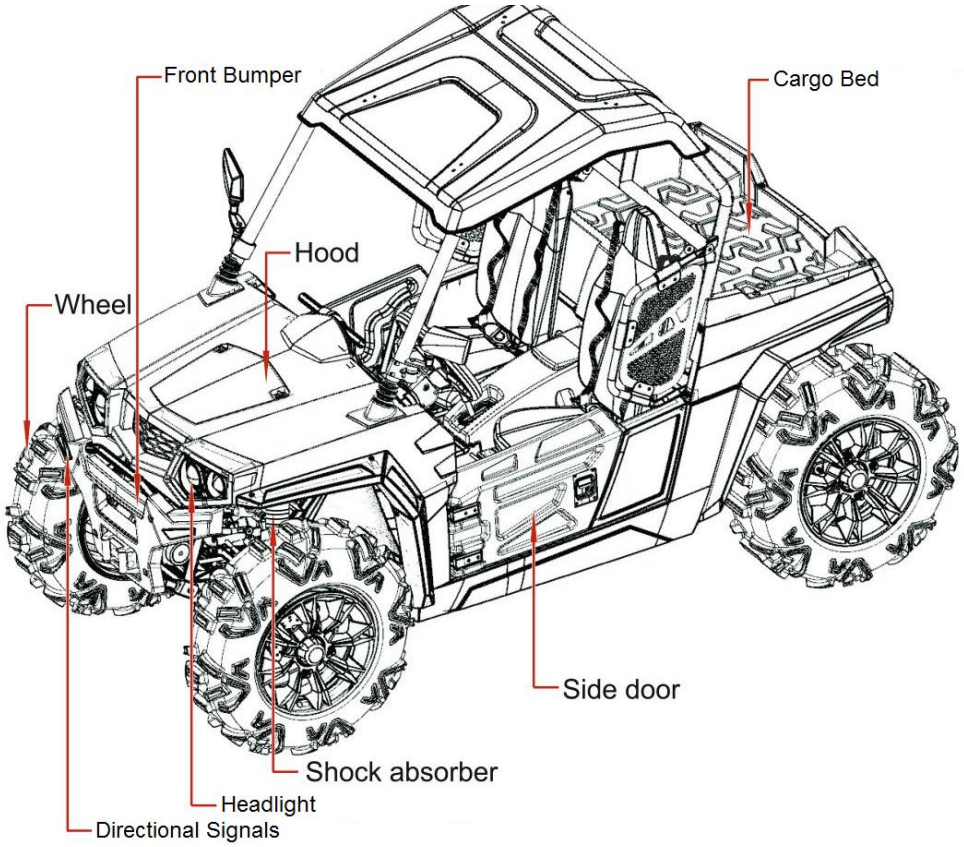

Introduction 250cc Sport

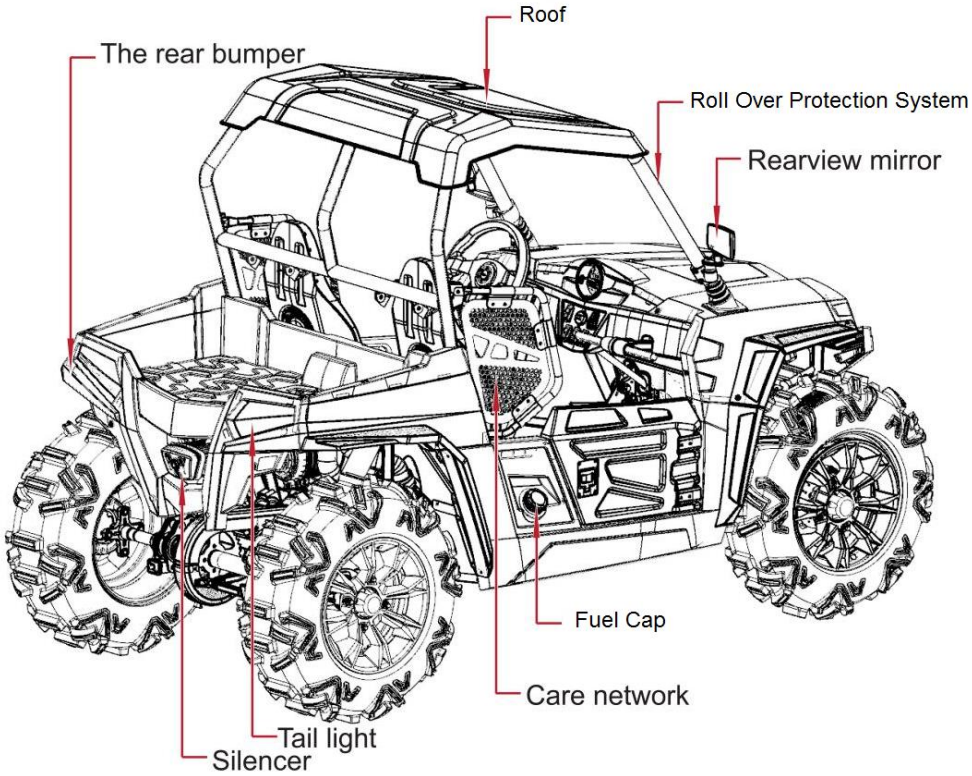

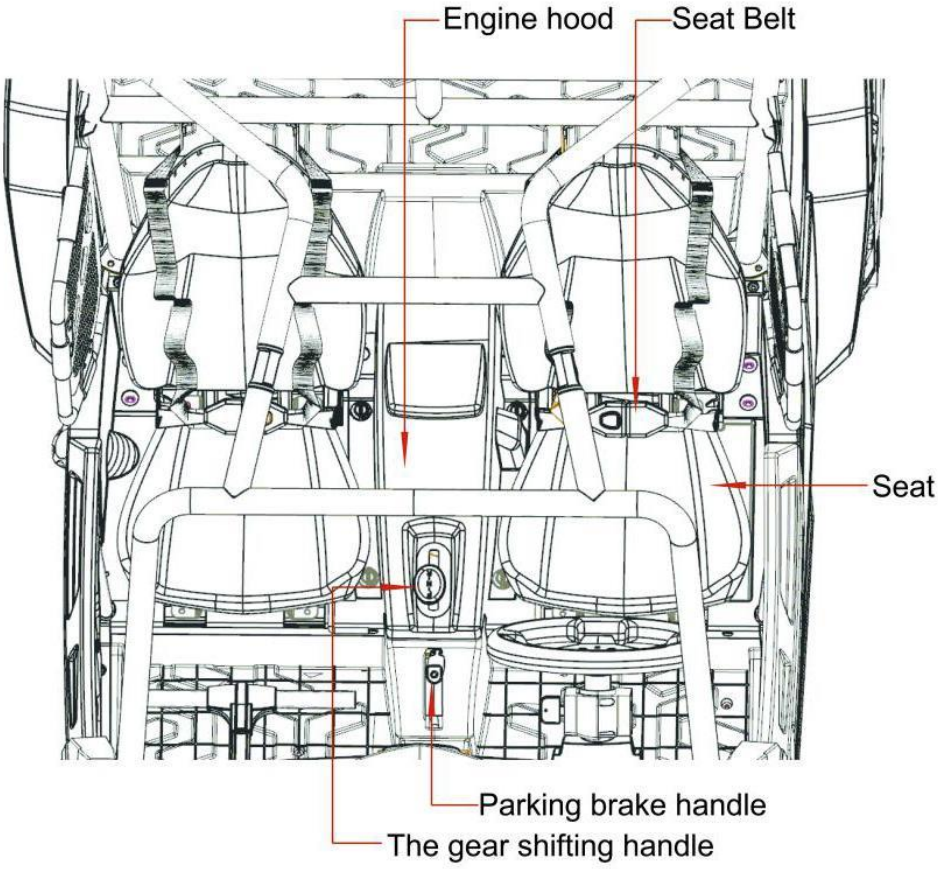

Introduction 250cc Sport

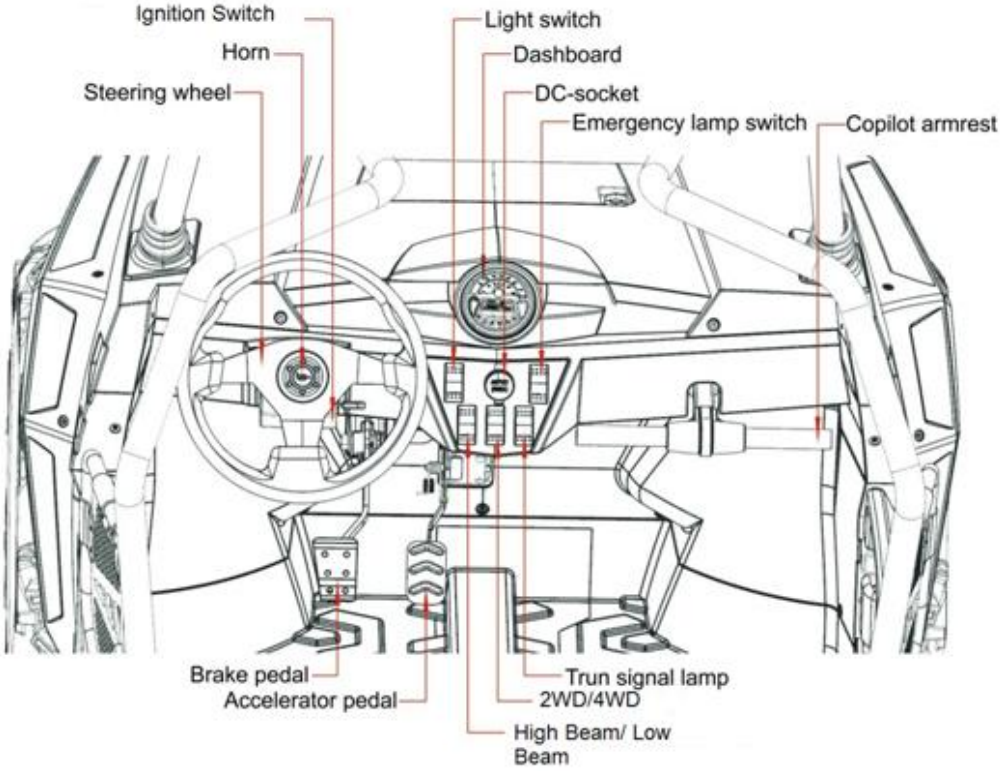

Safe Operation

All operators, including experienced UTV drivers or passengers, should carefully read and fully understand this Users Manual, and operate strictly as the manual states in order to achieve the best performance and avoid accidents. Others who will use your UTV should be trained on how to operate the UTV and be required to read this manual before operation.

1. Safety Instructions:

1. Understand this UTV by reading this manual and understanding all the components of the vehicle. Only start and operate the vehicle after finishing reading this manual.
2. Pay close attention to the warning and caution labels on the UTV.
3. Understand completely and learn to use the safety devices (roll-over protective structure, seat belts), and never change the original safety devices. If safety devices are damaged, consult your local dealer for replacement. Always use seat belts.

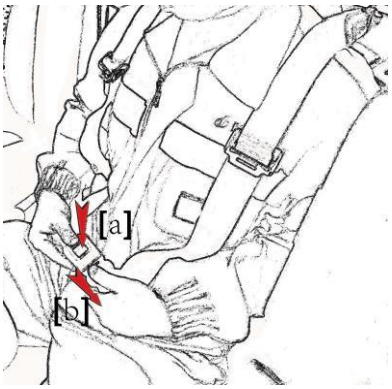

[1] Press the button [a] direction;
[2] Pull the locking [b] direction;

4. Do not wear loose articles of clothing during operation, as these can be drawn into moving parts on the vehicle and could cause a severe injury to occur.

You should always wear protective equipment, such as helmet, boots, eye protection, ear protection, and gloves etc.

5. Only a qualified driver should operate this UTV. Never operate after drinking, using drugs or controlled products, or while fatigued.
6. Always perform the pre-operation checks as following:
   1) Check seat belt for wear or damage, if necessary, replace it.
   2) Check brakes, throttle, brake pedal and other mechanical parts for proper operation. If you discover any irregularities, replace related parts as necessary. Periodically check the fittings and fasteners.
   3) Check engine oil level and engine coolant level.
   4) Check that the UTV is equipped to handle the surroundings.
   5) Check and keep vehicle clean. Sludge, grease and debris can cause a fire and severe injury.
7. Passenger quantity and loading:
   1) Only the driver and one passenger inside cab. It is suggested that children under age of 5 not be allowed as a passenger.

Single-row vehicle's loading limit is 498lbs (226KG). Reduce the loading weight according to road conditions. Never exceed the weight limits for operation.

   2) Never allow unauthorized persons to repair this UTV. This may affect vehicle performance and cause injury.

8. This UTV is designed and manufactured for off-road use only so never drive on paved roadways.
9. In addition to passenger seatbelts, a front passenger handrail, used with both hands to grasp and add additional personal stability. Adjust the lever (2) by loosening (b), then pull or push the Handle to the desired length and tighten (2) direction (a).

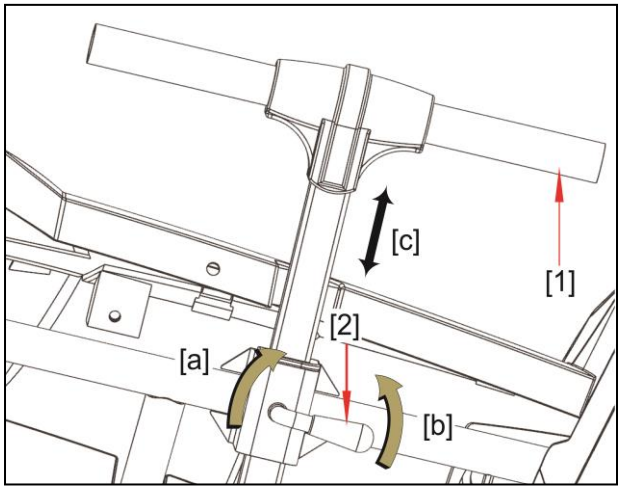

2. Operation

1. Start the engine only in an open ventilated area. Carbon monoxide is colorless, odorless and is emitted from the engine and can cause death in areas with poor ventilation.
2. Never start the vehicle or operate the gear selector unless seated in the driver's seat.
3. Never start the engine until the select lever is placed in "N" position and the brake is in the brake position.
4. The driver and passenger shall always wear their seatbelt while the vehicle is being operated.
5. Operators of the UTV should not wear earphones.
6. Do not accelerate quickly when starting the engine, especially driving on rough terrain as this can cause injury or death. Press the accelerator pedal slowly.
7. Drive at slow speeds before braking.
8. Never drive over terrain such as a ditch, a hole, dams, excessive mud, or the vehicle can get stuck because of the vehicles weight.
9. Always pay close attention to your surroundings, and check for streets, trail intersections or other obstacles.
10. Always use signals in advance of turns.
11. Do not allow entrance or exit of the vehicle while it is moving.
12. Keep the floorboard free of debris that can obstruct the ability to use the brake pedal.
13. Position your hands on the steering wheel. Always keep your hands and feet inside passenger area of the vehicle. Never try to stand while operating the vehicle.
14. Do not tow passengers, or attempt to jump the vehicle.
15. The buzzer will keep buzzing if the park is on when driving.

3. Children safety instructions

Always watch children when they are around the vehicle. Children like to imitate adults and this could lead to an accident.

Do not leave children alone around the vehicle.

Keep children from the operating area of the vehicle.

Turn off the engine and remove the key when children are in the operating area. Never carry children in the cargo area. This is very dangerous to children. Children under age of 5 should not be allowed in this vehicle

Never allow children to climb on the vehicle, even if they are under adult supervision.

Always check for people or obstacles behind the vehicle before shifting the vehicle into reverse. Avoid a collision with an obstacle or person.

Park the vehicle on level ground. If parking on a slope, you should use hand lever parking brake, remove the key and vehicle will stay stationary after letting off brakes.

4. Driving on a slope

Be cautious when riding on a slope, as this could result in loss of control or overturn, leading to severe injury.

1. Drive up and down on a slope at a low-speed.
2. Reduce weight when riding on a slope or rough terrain.
3. Avoid the sudden application of the brakes when you go uphill or downhill. Be more careful when vehicle turns on a slope.
4. If you start to lose momentum or need to park when climbing, use the hand lever brakes to come to a stop. Release the brake and begin to coast down the hill.
5. If you do not believe you can operate the UTV safely in reverse do not attempt to ascend the slope any further.
6. Riding in mud, a ditch, and on slopes will increase the risk of an overturn. Be more cautious when operating. Drive gradually and slowly when climbing. Avoid sudden changes of vehicle speed or direction.

5. Driving in harsh conditions

1. Vehicle can be operated during the day or under good light conditions.
2. Both operator and passengers should wear helmet and protective equipment.
3. The Driver should slow down according to road conditions, terrain, visibility conditions.
4. Driver should slow down according to road conditions, terrain, visibility conditions.
5. Be cautious when driving over a ditch, stone roads or hidden obstacles.
6. Avoid operating in any unknown depth of water.（water depth should not exceed axle height）

6. Driving at high speed

1. Check for front/rear wheels conditions.
2. Slow down when turning. Turning at high speed may result in overturn or even death.
3. Turn on your headlights at high speeds.
4. Drive only when the vehicle speed can be controlled.
5. When driving at high speeds, sudden turning of the steering wheel will reduce vehicle stability. Never sharply turn the steering wheel at high speeds.

7. Instructions for cargo bed

1. Never carry a passenger in the cargo area.
2. Evenly distribute the cargo to maintain proper stability. Avoid overloading the carrier. Cargo should be securely attached.
3. Reduce loaded weight when driving on poor road conditions or on steep inclines.
4. Only the driver should be in the seat when operating the hydraulic dump mechanism (if

applicable). Once lowered, lock the cargo bed in place before operating the vehicle.

5. Do not put your hands or your body under the cargo bed when the carrier is lifted (if applicable). Avoid driving before securing and locking the cargo bed.

8. Parking

1. Set the gear shift to the “N” position and pull the braking brake to the top position to park the vehicle, before the driver exits the vehicle.
2. Avoid stopping the vehicle on a slope. If stopping on a slope make sure the vehicle is stationary before exiting.

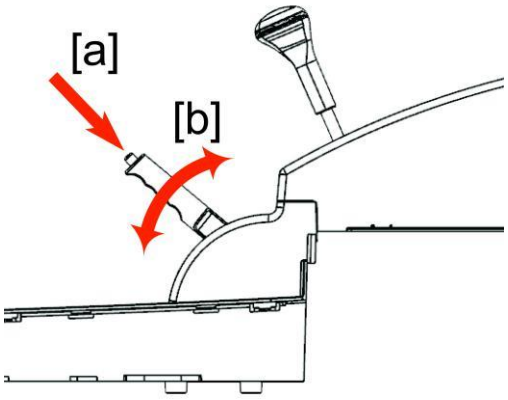

[1] Press in on button [a].

[2] Pull to “Lever” to the [b] direction.

9. Transporting vehicle

1. Avoid dragging the vehicle behind another vehicle. Use a trailer or truck to transport the vehicle.
2. When loading or unloading, pay attention to your surroundings and others in the area.

10. Maintenance

Stop the vehicle and park it on level ground. Pull the parking brake and remove all cargo. Place the shift lever in the “N” position, stop the engine and remove the key.

1. When working next to the engine, exhaust, or radiator, work only after it has cooled down.
2. Wait for the engine to stop running and cool down before checking the coolant level. Otherwise, you could be burned by hot fluid or steam.
3. No smoking when adding electrolyte or refueling. The fuel tank and battery should be kept away from sparks. The battery produces hydrogen and oxygen during charging and this could accelerate the risk of explosion.
4. Read and follow the instructions before replacing the battery.
5. During maintenance, first aid kits and fire extinguishers should be placed at your fingertips.
6. During maintenance, you should disconnect the battery cables.

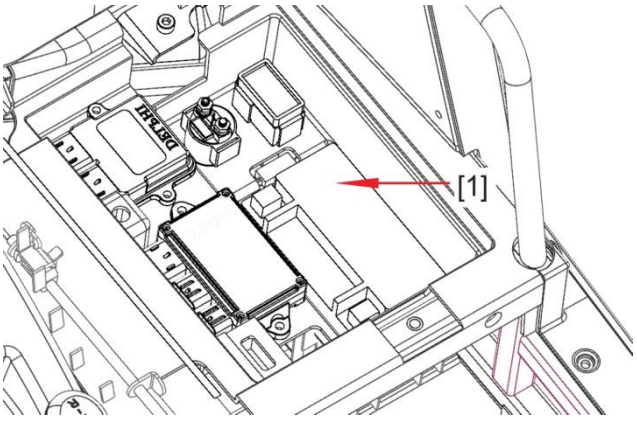

[1] Battery

7. Do not open radiator cap before coolant has cooled down. When the coolant is cold, open slowly to ensure no pressure is on the system, and then open cap. Check for the coolant level in the coolant reservoir. If necessary, add coolant. 8. Tires should be mounted on rims with special equipment, only by professionals. 9. Keep the specified tire pressure to ensure driving safety. 10. Elevate the vehicle and place a suitable stand under the frame when removing the wheels. Be sure to re-tighten the wheel nuts to the specified torque.	

Warning Labels

Warning and caution labels

（1）

⚠WARNING

- Turn speed not to exceed 12 MPH/20 KPH
- Do not drive in the water deeper than 15 in

（2）

⚠WARNING:

EXHAUST FUMES MAY CAUSE HARM

Engine exhaust from this product contains chemicals, known in certain quantities to cause cancer, birth defects, or other reproductive harm.

（3）

⚠CAUTION

- Select gear "L"on rough terrain and sloped terrain
- Climbing angle less than 15°

（4）

⚠ WARNING

- Use only 91 Octane or higher gasoline.
- Use Non-Ethanol gasoline when possible for better performance and engine.
- **Never use E-85** gasoline in this engine as use of E-85 gasoline will void the warranty.

（5）

⚠CAUTION

Seats can be moved back and forth.

（6）

⚠ WARNING

Change the oil when the temperature drops to -15 Celsius (5° Fahrenheit)

（7）

⚠WARNING

Severe INJURY or DEATH can result if you ignore the following guidelines:

- Maximum load in cargo bed is110lbs(50kg)
- Never carry passengers in cargo bed. Passengers can be thrown off causing serious injury or death.
- Cargo can affect handling and stability. Read Owner's Manual before loading or towing.
- When operating with cargo or towing a trailer always reduce speed, allow more room to stop and avoid hills and rough terrain.
- Be sure cargo is secured since a loose load can change vehicle handling.
- Keep weight in the cargo bed centered and as low and far forward as possible. Top-heavy loads increase the risk of rollover.

（8）

⚠WARNING

Never carry passengers in cargo bed.

（9）

⚠ WARNING

Improper tire pressure or overloading can cause loss of control.
Loss of control can result in severe injury or death.

- Cold tire pressure:
  Front : 7psi (49kPa)
  Rear : 7psi (49kPa)
- Maximum weight capacity:498lbs.(226kg)

（10）

⚠CAUTION

- To avoid transmission damage, shift only when vehicle is stationary and at idle.
- When vehicle is stopped, place brake lever in the parking.

APPLY BRAKE TO START

（11）

⚠WARNING

Improper Use of Off-Highway Vehicles Can Cause Severe Injury or Death

Be Prepared

- Fasten seat belts.
- Wear an approved helmet and protective gear.
- Each rider must be able to sit with back against seat, feet flat on floor [and foot rests], and hands on steering wheel or handhold[s][,where equipped], Stay completely inside the vehicle.

Be Sure Riders Pay Attention and Plan Ahead

If you think or feel the vehicle may tip or roll, reduce your risk to injury:

- Keep a firm grip on the steering wheel or handholds and brace yourself.
- Do not put any part of your body outside of the vehicle for any reason.

Warning Labels

（12）

SERVICING OF VEHICLE

Your dealer is interested in your new vehicle and has the desire to help you get the most value from it. After reading this manual thoroughly, you will find you can do some of the regular maintenance by yourself.

However, when in need of parts or major service, be sure to see your dealer.

For service, contact the dealership from which you purchased your vehicle or your local dealer.

When in need of parts, be prepared to give your dealer both the vehicle and engine serial numbers. Locate the serial numbers now and record them in the space provided.

	Type	Serial No.
Vehicle		
Engine		
Product Identification Number		
Date of Purchase		
Name of Dealer		

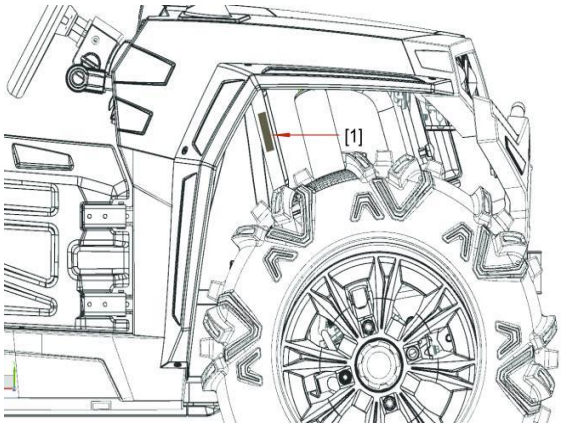

[1] Vehicle Identification number.

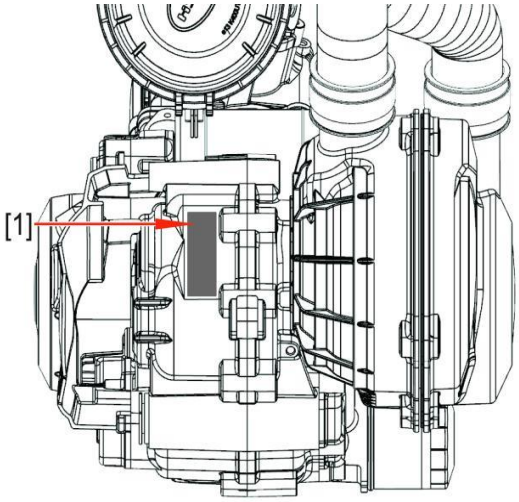

[1] Engine serial number

Specifications

SPECIFICATION TABLE

Engine	Make		Specification
	Type		1cylinder, 4-cycle, gasoline, SOHC, liquid cooled
	Displacement(s)	cc	229CC
	Horsepower	Kw(HP)	12.4 kW（16.6Hp）
	Rated revolution	rpm	7500
Fuel Capacity		L(U.S.gas)	≤13.5（3.6 ± .01 Gal）
Transmission			CVT
Wheels, Drive system			4,
Gear selection			L-H-N-R
Brakes	Front/Rear		Hydraulic disk brake
	Parking brake		Mechanical brake
Steering			Mechanical power, Steering wheel
Suspension	Front		Independent, short-long arm type
	Rear		Independent, short-long arm type
Dimensions	Length	mm(in.)	2260 (88.98)
	Wide	mm (in.)	1262（49.69）
	Height	mm (in.)	1500（59）
	Front tread centers	mm (in.)	952.5 (37.5)
	Rear tread centers	mm (in.)	977.9 (38.5)
	Wheelbase	mm (in.)	1733（68.22）
	Ground Clearance front axle	mm (in.)	206（8.1）
	Ground Clearance rear axle	mm (in.)	148（5.82）
	Turning diameter	m (ft)	7（22.96）
Max. rolling weight		kg (lbs.)	N/A
Cargo load capacity		kg (lbs.)	50（110）
Weight		kg (lbs.)	360（794）

Specifications

Model			Specification	
Cargo bed	Width	mm (in.)	965.2 (38)	
	Length	mm (in.)	540（21.25）	
	Depth	mm (in.)	180（7.08）	
	Volume	m^3 (cu.ft.)	0.09（3.17）	
	Bed height (unloaded)	mm (in.)	728（28.66）	
	Cargo bed capacity	kg (lbs.)	50（110）	
Sound level, operator ear		db (A)	85	
Tire	Front		22×7-10 6PR	
	Rear		22×10-10 6PR	
Body color			Red, Black, White, Blue, Yellow, Orange, Camo	

NOTE:

- The values in “Ground clearance” and “Weight” are those of the machine equipped with the tires in the table above.
- The company reserves the right to change the specifications without notice.

TRAVELING SPEEDS

Range gear shift lever	km/h (mph)
Low	13（8）
High	40（25）
Reverse	16（10）

VEHICLE LIMITATIONS

The Vehicle has been thoroughly tested for proper performance with implements sold or approved by Coleman Powersports. Use with implements which are not sold or approved and which exceed the maximum specifications listed below, or which are otherwise unfit for use, may result in vehicle malfunction or failures with a possibility of the vehicle damage, property damage and injury to the operator or others. Any malfunctions or failures of the vehicle resulting from use with improper implements are not covered by the warranty.

Max. Cargo loading weight	
Cargo Bed Capacity=50Kg(110 lb) Cargo Load Capacity=226kg(498 lb) *(operator+one passenger+opt+acc)weight	Max. rolling weight N/A

1. Above mentioned specifications are based on level ground condition.

DAILY CHECK

To better prevent issues, familiar yourself with the operation of the vehicle prior to driving.

⚠ CAUTION：

To avoid personal injury：

Be sure to check and service the vehicle on a level surface with the engine shut off and the parking brake set. Ensure that engine temperature has cooled down prior to any work performed.

Check items

- Check Pre-Ride checklist on page 9-3 prior to operating vehicle.

-Review all warning and caution labels for compliance prior to operating vehicle.

The vehicle comes with the following key:

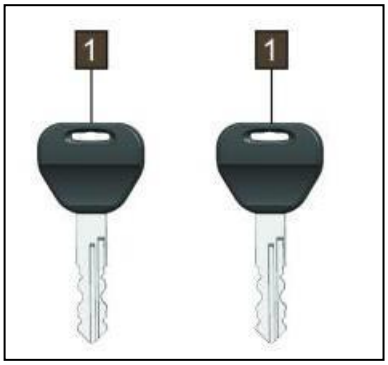

[1] Master key

Operating the Engine

⚠ CAUTION：

To avoid personal injury：

- **Read "SAFE OPERATION" in front of this manual.**
- **Read the danger, warning and caution labels located on the vehicle.**
- **To avoid the danger of exhaust fume poisoning, do not operate the engine in closed buildings without proper ventilation.**
- **Start engine only from operator's seat. Never start engine while standing on ground.**
- **Make it a rule to set gear shift lever to "NEUTRAL" position before starting the engine.**

IMPORTANT:

- Do not use starting fluid or ether.
- To protect the battery and the starter, make sure that the starter is not continuously turned for more than 5 seconds.

STARTING THE ENGINE

1. Make sure the parking brake is set.

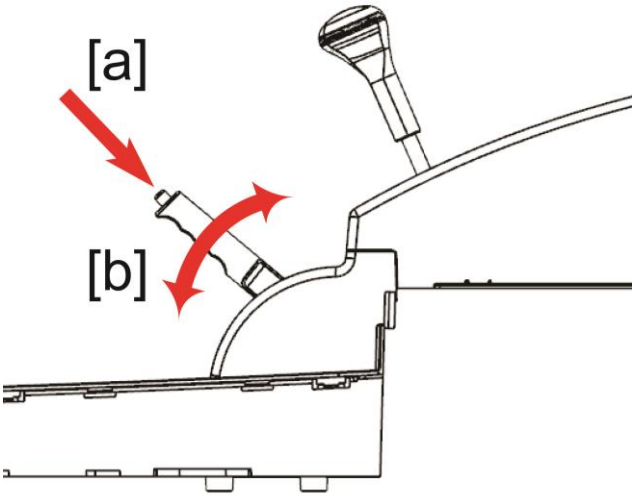

[1] Press in the button [a]

[2] Pull (b) to engage parking brake push (b) to release the parking brake.

NOTE：

The parking brake warning lamp (P) comes on while parking brake is applied and goes off when it is released.

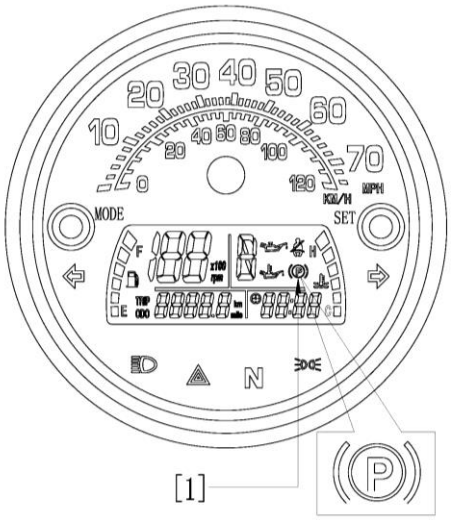

[1] Parking brake warning lamp

Operating the Engine

2. Set gear shift lever to the "NEUTRAL" position.

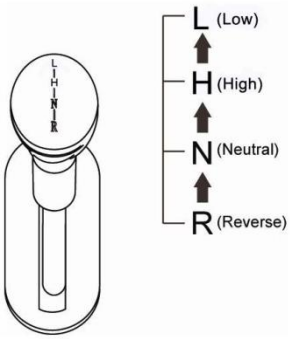

3. Push the accelerator pedal down slowly.

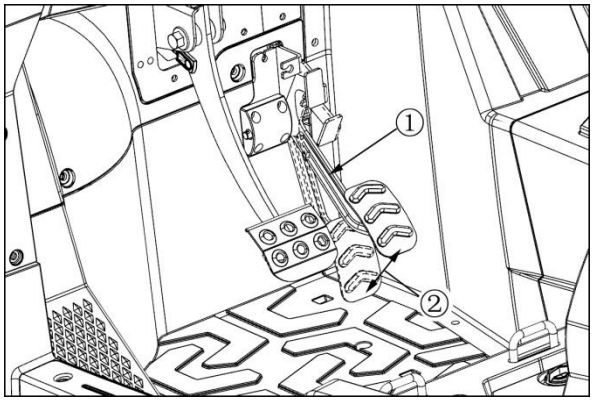

① Accelerator pedal

② Accelerator pedal depressed

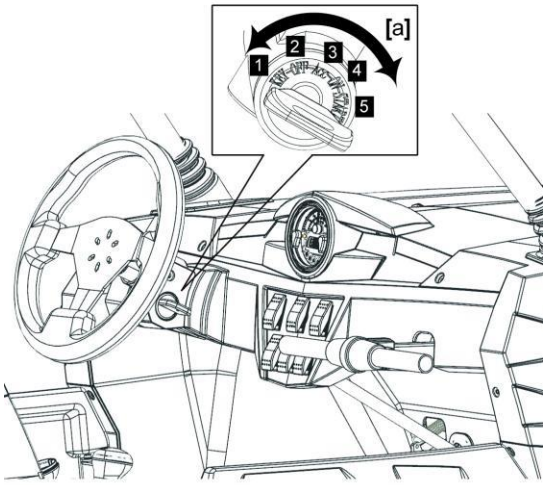

1. Insert the key into the key switch and turn it to :

   "START" (Starts the Engine)

   OFF (Stops the Engine)

   ON (Engine runs or headlights on)

◆ **Engine and other Check Lamps:**

1. When the key is turned to "START", lamps (1 engine oil pressure) should come on. If trouble codes occur at any location with engine running, the warning lamp corresponding to that location comes on.

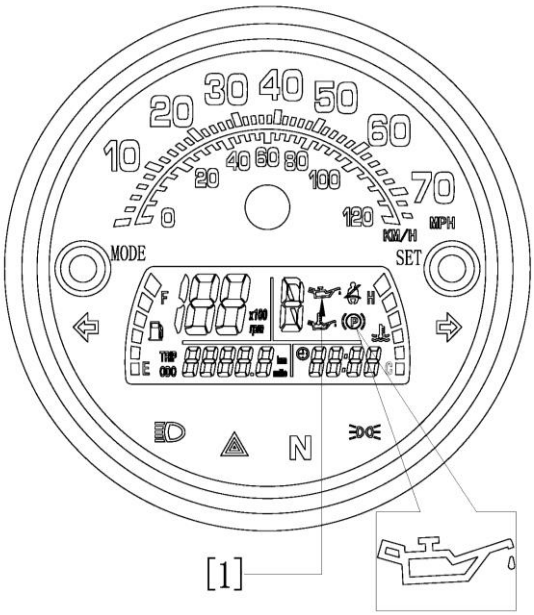

IMPORTANT :

- Relying on the engine warning lights is never enough. Never fail to conduct daily checks carefully by referring to Pre Operation Check " in "PERIODIC SERVICE" section.

5. Turn the key to the "START" position and release when the engine starts.

IMPORTANT:

- Because of safety devices, the engine will not start except when the gear shift lever is placed in the "NEUTRAL" position and the brake is depressed.

■ **Cold Starting**

When the ambient temperature is below -15℃(5℉), the engine is very cold. If the engine fails to start after 5 seconds, turn off the key for 30 seconds and start again.

STOPPING THE ENGINE

1. After slowing the engine to idle, turn the key to “OFF”.
2. Remove the key.

VEHICLE WARM UP

⚠ CAUTION：

To avoid personal injury:

- **Be sure to set the parking brake during warm-up.**
- **Be sure to set the shift lever to the warming up engine.**

For 5 minutes after engine start-up, allow the engine to warm up without applying any load. This is to allow sufficient oil protection for all internal wear components.. If load is applied to the engine without warming-up, engine damage may occur.

■ **Warming Up Transmission**

IMPORTANT:

- Do not operate the vehicle under full load until it is sufficiently warmed up.

Operating the Vehicle

OPERATING NEW VEHICLE

How a new vehicle is handled and maintained determines the life of vehicle.

A new vehicle just off the factory production line has been, of course, tested, but the various parts are not aligned to each other, so the operator should pay more attention to operating the vehicle for the first 50 hours at a slower speed and avoid excessive work or operation until the various parts become “broken-in.” The manner to which you handle the vehicle during the “breaking-in” period greatly affects the life of your vehicle. Therefore, to obtain the maximum performance and the longest life of the vehicle, it is very important to properly break-in your vehicle. For better handling of a new vehicle, the following precautions should be observed.

■ **Do not operate the vehicle at full speed for the first 50 hours.**

- Do not start quickly nor apply the brakes suddenly.
- In winter, only operate the vehicle after fully warming up the engine.
- Do not run the engine at speeds faster than prescribed.
- On rough roads, slow down to suitable speeds.

  The above precautions are not limited to new vehicles. However, they should be especially observed for new vehicles.

■ **Changing Lubricating Oil for New Vehicles**

The lubricating oil is especially important for a new vehicle. Various parts need time to wear and polish themselves to the correct operating clearances . Small pieces of metal grit may develop during the operation of the vehicle; and this may wear out or damage the parts. Therefore, change the lubricating oil a little earlier than would ordinarily be required. For further details of change interval hours, see “MAINTENANCE” section

STARTING

1. Fasten the seat belts during operation.

■ **Seat Belt**

⚠WARNING

To avoid personal injury:

- **Seat belts reduce injury. Always wear your seat belts. The lap-style seat belts may not provide adequate protection for small children. Pay special attention when carrying a child passenger.**

⚠ CAUTION：

To avoid personal injury:

- **Seat belts reduce injury. Always wear your seat belts. The lap-style seat belts may not provide adequate protection for small children. Pay special attention when carrying a child passenger.**
- **Always use the seat belts when operating and riding the vehicle.**

Adjust the seat belts for proper fit and connect the buckle. This seat belt is an auto-locking retractable type.

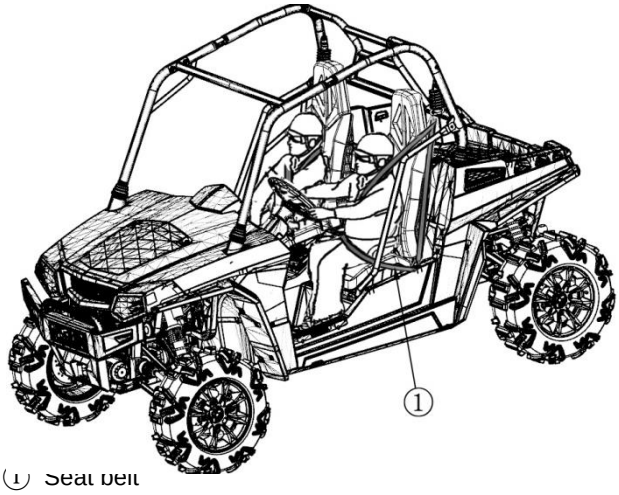

① Seat belt

2. Selecting light switch position.

■ Head Light Switch

Turn on the key switch and toggle the head light switch to the (a) or ON position.

Toggle the head light switch to the (b) or OFF position, to turn off the head light.

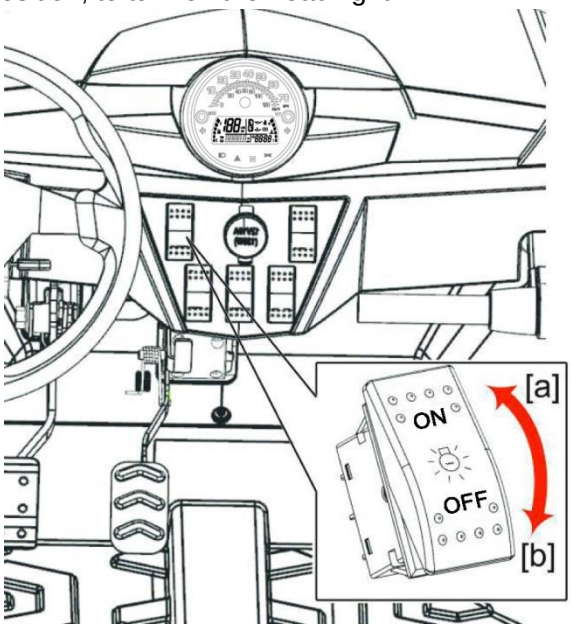

NOTE：

Turning the head light switch to the “[a]” position causes the following lamps to light simultaneously.

1. Tail lights (lamps at the rear portions of the vehicle)
2. Lamp built in the coolant temperature gauge.

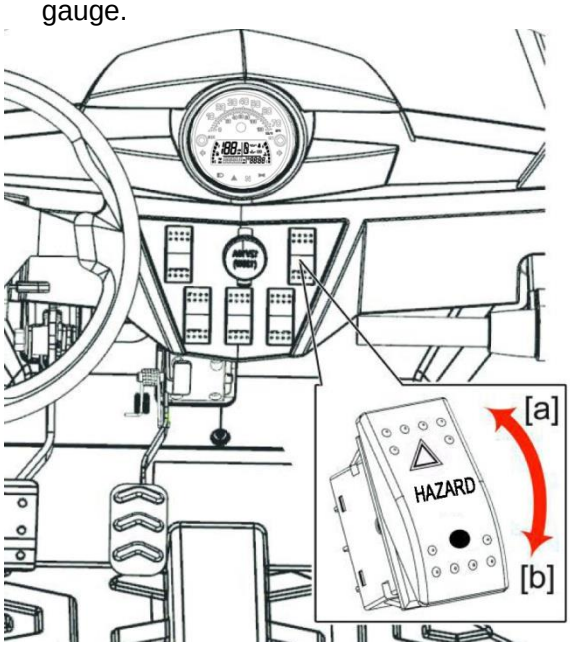

3. Lamp built in the fuel gauge
4. Lamp built in the speedometer

■ Hazard Light Switch

[if equipped]

Press the hazard switch to the up position to turn on the hazard lights. This will turn on the blinking turn signals and audible alarm will sound.

Note:

- The hazard light switch will operate when the key switch is in the “ON” or “OFF” position. Keeping the switch “ON” causes the battery voltage to run down.

■ **Turn Signal Light Switch**

[if equipped]

To indicate a right turn, push on the lower half of the turn toggle switch.

To indicate a left turn, push on the upper half of the turn toggle switch.

When the left or right signal is activated, the indicated turning light will flash and the other will stay on.

The indicator lamp at the instrument panel also flashes indicating the direction of the turn.

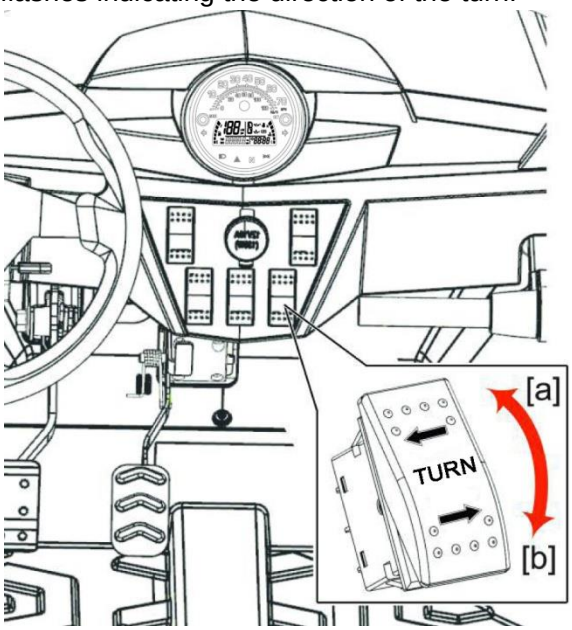

NOTE:

- The turn signal light switch is only operational when the key switch is in the "ON" position.

  If the hazard light switch is switched to the "[a]" position while the turn signal is activated, the indicated turning light will flash and other will stay on.
- Be sure to return switch to center position after turning.

3. Checking the brake pedal.

■ **Brake Pedal**

⚠CAUTION:

To avoid personal injury:

- **If the operator suddenly brakes, an accident may occur due to loss of control or the shifting forward of heavy loads.**
- **When driving on icy, wet or loose surface, make sure the vehicle is correctly loaded to avoid skidding or loss of steering control. Reduce the speed.**

The brake pedal is the left pedal on the foot board. Depress the pedal to slow or stop the vehicle.

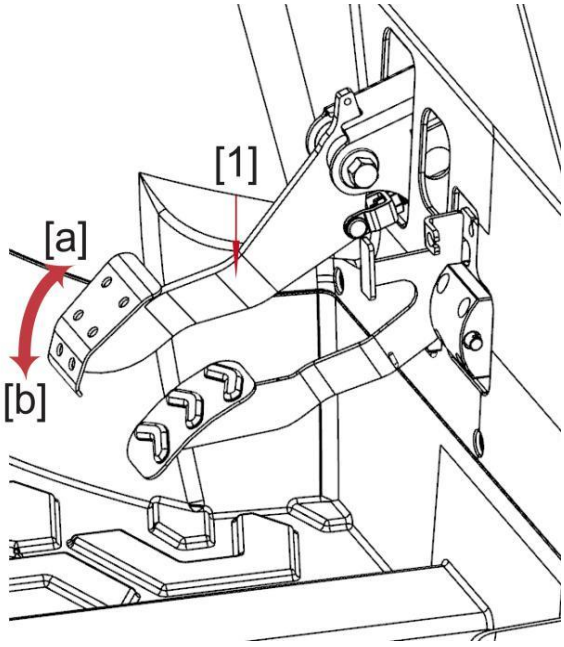

[1] Brake pedal

4. Selecting the Correct Gear.

■ **Gear Shift Lever**

⚠CAUTION:

To avoid personal injury:

- **Avoid changing gears when ascending or descending a slope.**
- **Before ascending or descending a slope, shift to the "L" range to control the vehicle speed.**
- **Operate in reverse at slow speeds to maintain control.**

1. The gear shift lever can only be shifted when the vehicle is completely stopped and the brake pedal is pressed.
2. To avoid transmission and shift linkage damage, completely stop the vehicle prior to changing gear rang or direction.
3. Select proper gear depending on the type of job.
4. Before exiting the vehicle, shift the gear shift lever to the "NEUTRAL" position and set parking brake..

NOTE:

- When gear shift lever is hard to engage, do not force the lever. Set the parking brake, slightly depress the accelerator pedal and release it to neutral position, then shift the lever.
  When the lever is hard to disengage, do not force the lever.
- Depress the brake pedal fully, then shift the lever. Damage may occur with wrong shifting operation.
- AN accident could occur through improper use of the gear shift lever

IMPORTANT:

5. Release the parking brake and start slowly.

To release the parking brake, depress the brake pedal, push release button and push down on the parking brake lever. Make sure that indicator in the Instrument panel goes off.

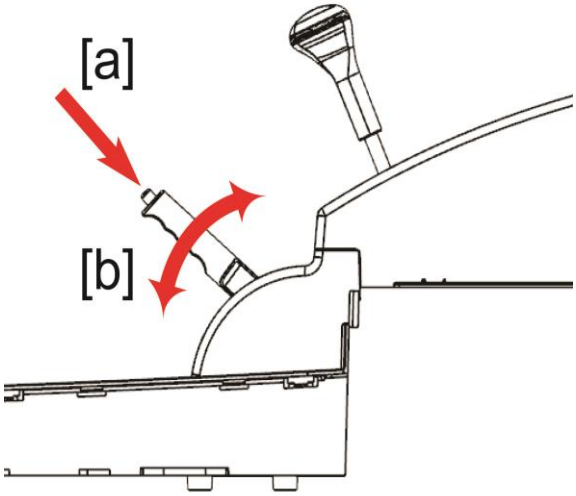

[1] Press in the button [a].

[2] Pull to set in the [b] direction. Push to release in the (b) direction.

■ **Accelerator Pedal**

The Accelerator pedal is used to increase the engine and vehicle speed. Push down on it for higher speed.

STOPPING

■ **STOPPING**

1. Release the Accelerator pedal
2. Step on the brake pedal.

CHECK DURING DRIVING

■ Immediately Stop the Engine if:

- The engine suddenly slows down or accelerates.
- Unusual noises are suddenly heard.
- Exhaust fumes suddenly become very white.

While driving, check the following items to see if all parts are functioning normally.

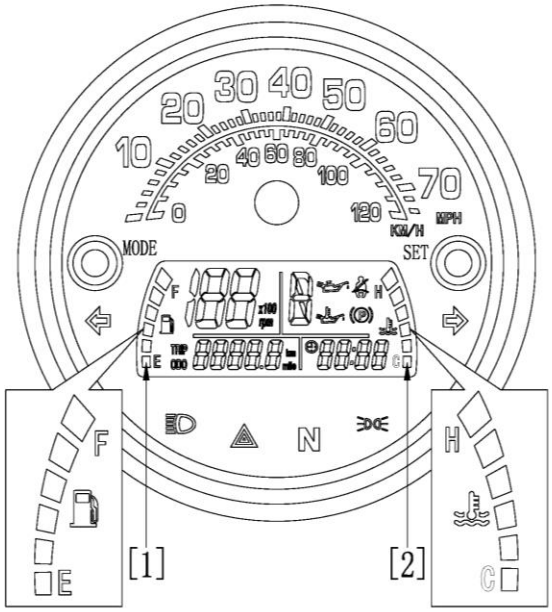

[1] Fuel gauge

[2] Coolant temperature gauge

■ Fuel Gauge

Park the vehicle on a flat place.

Turn the key switch to “On”, the fuel gauge will indicate the fuel level.

Be careful not to fully empty the fuel tank. Otherwise air may enter the fuel system.

■ Coolant Temperature Gauge

⚠CAUTION:

To avoid personal injury:

- **Do not remove radiator cap until the coolant temperature is well below its boiling point. Then loosen cap slightly to relieve pressure before removing cap completely.**

1. With the key switch “ON” the temperature gauge indicates the temperature of the coolant. White Zone for “cold” and Red zone for “hot”.
2. If the indicator reaches the Red zone, the engine coolant is overheated. Check the vehicle by referring to the “TROUBLESHOOTING” section.

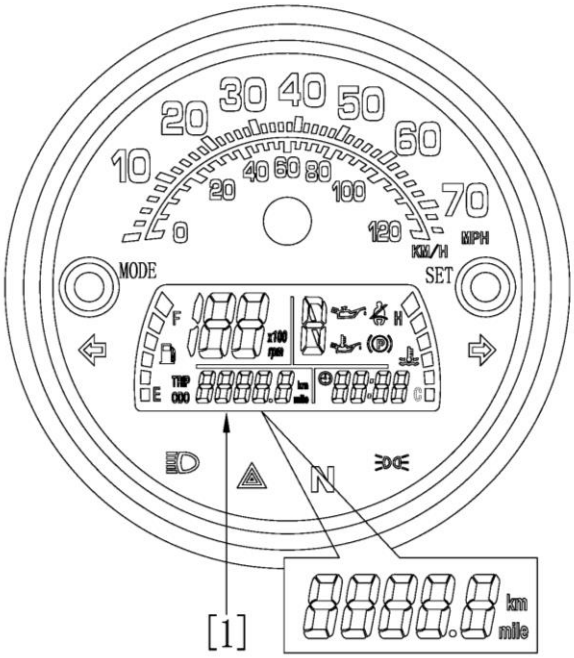

[1] Hour meter

The hour meter indicates in five digits the hours the vehicle has been used; the last digit indicates 1/10 of an hour.

The speedometer indicates the traveling speed.

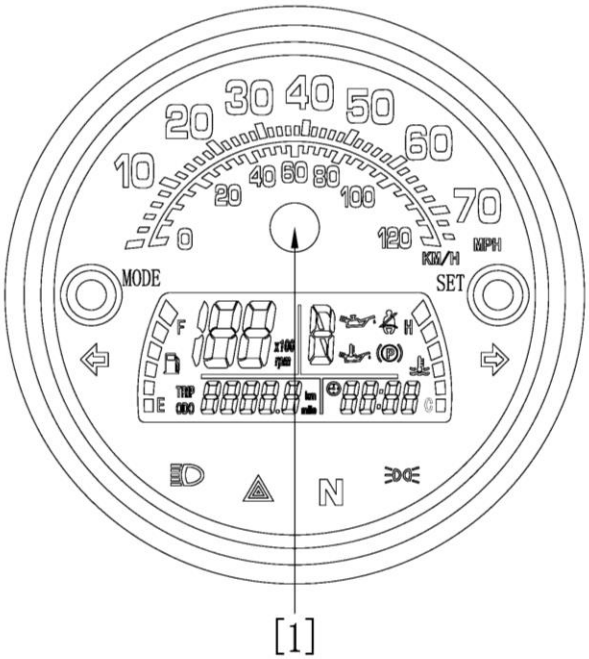

[1] Speedometer

Adjustable steering wheel

For driving comfort:

Use a screw driver to adjust the steering wheel to “[1]”,”[2]” two positions, after fastening bolts adjustment.

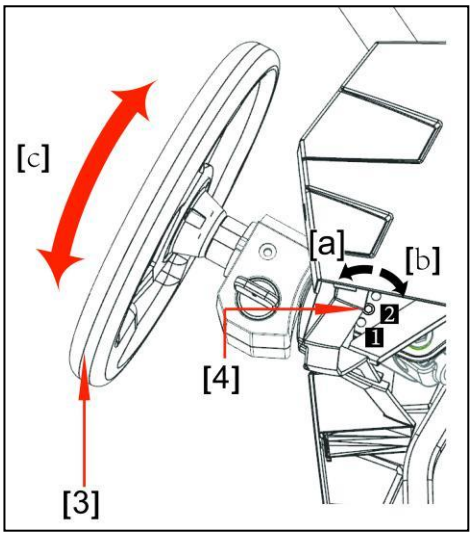

[3] Steering wheel [4] Bolt

“[a]” direction adjustment screw, “[c]” direction up and down to adjust the position of the steering wheel caused by “[1]”,”[2]” then “[b]” direction of the fastening bolts.

WINCH OPERATIONS

Always read and follow the instructions in the winch owner's manual before attempting to install or use a winch.

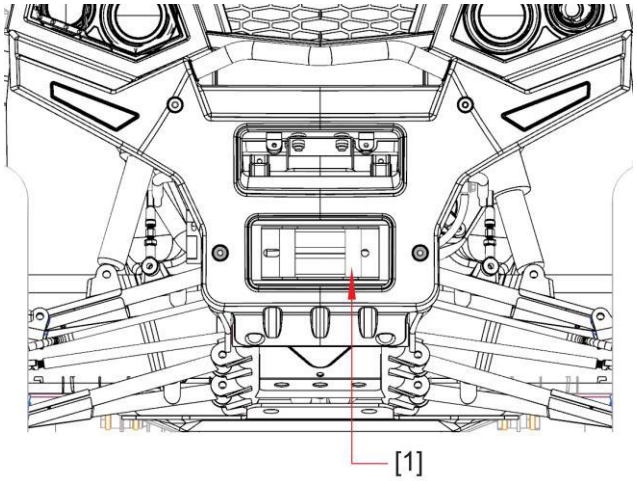

[1] Winch mount plate

■ Transporting Vehicle

Pay attention to the following points when transporting the vehicle.

1. Use a suitable truck and trailer.
2. Apply the parking brake and properly secure vehicle to trailer.
3. Tie the vehicle to the sides of the trailer or truck using suitable tie-downs.

Maintenance and Adjustment

⚠ CAUTION:

To avoid personal injury and vehicle damage:

- **Be sure you have sufficient knowledge, experience, the proper replacement parts and tools before you attempt any vehicle maintenance task.**
- **If you don't have the knowledge and equipment which are necessary to perform the maintenance task, consult your local dealer.**

SERVICE INTERVALS

ITEM	MAINTENANCE INTERVAL (WHICHEVER COMES FIRST)			REMARKS
	Hours	Frequency	Miles (KM)	
Pre-Ride Inspection Check				
Steering	-	Pre-Ride	-	Inspect for loose hardware or abnormal wear
Front-suspension	-	Pre-Ride	-	Inspect for loose hardware or abnormal wear
Rear-suspension	-	Pre-Ride	-	Inspect for loose hardware or abnormal wear
Tires	-	Pre-Ride	-	Proper tire pressure
Brake fluid level	-	Pre-Ride	-	Inspect and add if needed
Brake pedal travel	-	Pre-Ride	-	See Owner's Manual
Brake systems	-	Pre-Ride	-	Make adjustments as needed.
Lug Nuts	-	Pre-Ride	-	Ensure lug nuts are torque to spec
Frame fasteners	-	Pre-Ride	-	All fasteners are secured
Engine Oil Level	-	Pre-Ride	-	Inspect and add if needed
Coolant	-	Pre-Ride	-	Inspect and add if needed
Head / Tail / Brake Lights	-	Pre-Ride	-	Check operation
ITEM	**MAINTENANCE INTERVAL (WHICHEVER COMES FIRST)**			**REMARKS**
	Hours	**Frequency**	**Miles (KM)**	
Break-In Maintenance Check				
Engine Oil/Filter change	10	-	First 50 (75)	Replace break-in oil & filter with proper oil type
Transmission	20	-	First 100 (150)	Initial fluid level inspection; add lubricant if needed
Toe adjustment	20	-	First 100 (150)	Inspect periodically; adjust when parts are replaced
Clutches (Drive and Driven)	20	-	First 100 (150)	Inspect; clean; replace worn parts

Maintenance and Adjustment

ITEM	MAINTENANCE INTERVAL (WHICHEVER COMES FIRST)			REMARKS
	Hours	Frequency	Miles (KM)	
Routine Maintenance Check (performed at each interval below, whichever comes first)				
Air filter	5 H	-	-	Inspect; replace as needed
Brake pad wear	20 H	Monthly	250 (402)	Inspect periodically
Throttle Body Intake	20 H	1 M	250 (402)	Inspect duct for proper sealing/air leaks
Battery	20H	Monthly	250 (402)	Check terminals; clean; test
Fuel System	25 H	Monthly	250 (402)	Check lines & fittings for leaks
General lubrication	25H	3 M	250 (402)	Lubricate all fittings, pivots, cables, etc.
Shift Linkage	25H	3 M	250 (402)	Inspect, lubricate, adjust
Engine Oil & Filter	50 H	6 M	500 (800)	Replace
Steering	50 H	6 M	500 (800)	Lubricate
Front / Rear Gearcase Fluid	50H	6 M	500 (800)	Change Fluid
Front / Rear Stabilizer Bars	50H	6 M	500 (800)	Lubricate and inspect bushings
Throttle Pedal/Cable	50 H	6 M	500 (800)	Inspect for free movement & lubricate
Drive Belt	50 H	6 M	500 (800)	Inspect; replace as needed
Antifreeze Coolant	50 H	6 M	500 (800)	Pressure Test / Add Fluid
Tranmission Fluid	50 H	6 M	500 (800)	Replace
Engine mounts	100 H	12 M	1000 (1600)	Inspect; replace as needed
Cooling Hoses	100 H	12 M	1000 (1600)	Inspect for cracks and leaks
Drive Shafts	100H	12M	1000 (1600)	Remove and grease
Spark plug	100 H	12 M	1000 (1600)	inspect; replace as needed
Clutches (Drive and Driven)	100 H	12 M	1000 (1600)	Inspect; clean; replace worn parts
Wiring	100 H	12 M	1000 (1600)	Inspect for wear & routing
Wheel Bearings	100 H	12 M	1000 (1600)	Inspect; replace as needed
Shocks	100 H	12 M	1000 (1600)	Check for oil leaks
Cam Chain Tensioner	100H	12 M	1000 (1600)	Check; replace as needed
Brake Fluid	100 H	12M	1000 (1600)	Change every two years
Suspension Components	100H	12M	1000 (1600)	Inspect; replace if necessary
Spark arrestor	100H	12 M	-	Clean out
Valve clearance	100 H	12M	1000 (1600)	Inspect; adjust
Extreme Maintenance Check (cut the Routine Maintenance Schedule in half)				
*__Service Note:__ Under extreme use, change gear case fluid every 25 hours. *"Extreme Use" is defined as constant 4WD operation on hilly or mountainous terrain, or if 4WD is the primary mode of operation.*				

Maintenance and Adjustment

LUBRICATION RECOMMENDATIONS

Check and lubricate all components at the intervals outlined in the Periodic Maintenance Chart above, or more often under severe use, such as wet or dusty conditions. Items not listed in the chart should be lubricated at the general lubrication interval.

ITEM	LUBE	METHOD
Engine Oil	See Viscosity Chart (10-3) API-SJ & JASO/MA	Add to proper level on dipstick.
Brake Fluid	DOT 3 or 4 Brake Fluid	Maintain level between fill lines.
Rear Differential	SAE 80w90	Fill to bottom of fill plug or 0.455L or 14 oz.)
Front Differential	Dextron 3 ATF	Fill to bottom of fill plug or (volume of oil)
Drive Shaft	U-Joint Grease	Locate fittings and grease.

ENGINE OIL

Always check and change the oil at the intervals outlined in the Service Interval Chart above. Always use the recommended engine oil. Always change the oil filter whenever changing oil.

Vehicle operation with insufficient, deteriorated, or contaminated engine oil will cause accelerated wear and may result in engine seizure, accident and injury. Always perform the maintenance procedures as outlined in the Periodic Maintenance Chart. Failure to perform routine maintenance could result in voiding of remaining warranty.

CAUTION:

To avoid personal injury:

HOW TO OPEN THE HOOD AND TILT THE SEAT

CAUTION

To avoid personal injury from contact with moving parts:

- **Never open operator's seat while the engine is running.**
- **Depress the hood with your other hand while unlocking the hood.**

■Hood

To open the hood, turn the switch to release the latch and lift the hood off.

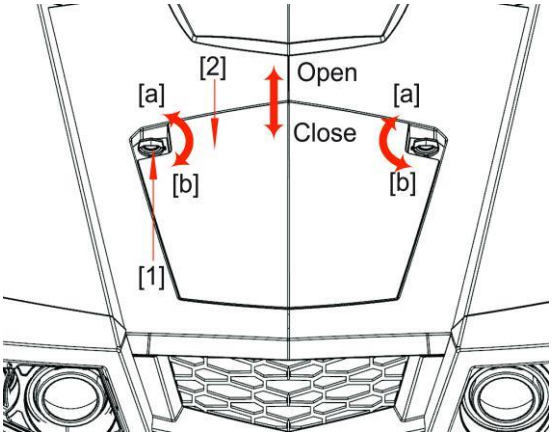

[1]Latch

[2] Hood

[3] "Open" from "[a]" direction of rotation

"Close" from "[b]" direction of rotation

■Operator's Seat

To open the seat, raise the seat to the forward position.

USE HANDLE (A) TO UNLOCK, THEN SLIDE SEAT TO THE DESIRED POSITION (B) AND RELEASE HANDLE (A).

CONVENTIONAL STRUT ADJUSTMENT

The spring preload can be adjusted to suit the operating conditions.

You can reduce preload for a softer ride, or increase preload if the vehicle is bottoming out on rough terrain.

CAUTION

Frequent or severe bottoming out can cause increased wear or damage to the vehicle.

Adjust the spring preload as follows.

To increase the spring preload, turn the adjusting ring in direction ⓐ.

To decrease the spring preload, turn the adjusting ring in direction ⓑ.

RESERVOIR STRUT ADJUSTMENT

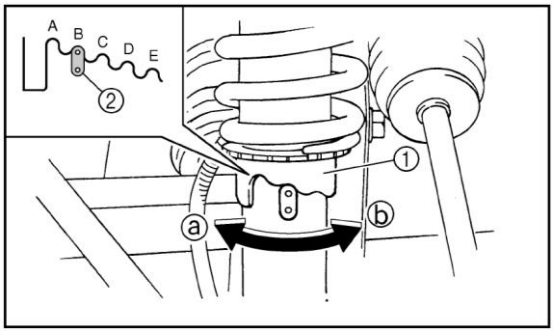

1. Spring preload adjusting ring
2. Position indicator

NOTE

A special wrench can be obtained at a service center to make this adjustment.

Standard position: B A-Minimum(soft) E-Maximum(hard)

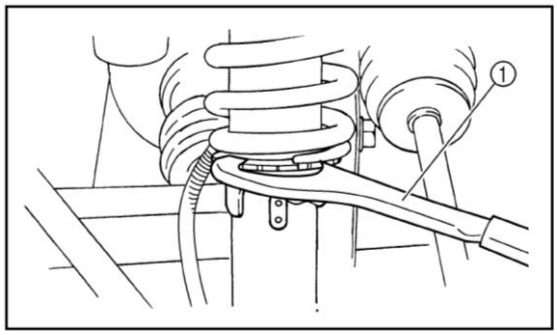

1. Special wrench

⚠WARNING

<u>POTENTIAL HAZARD</u>

Improper shock absorber adjustment.

<u>WHAT CAN HAPPEN</u>

Uneven adjustment can cause poor handling and loss of stability, which could lead to an accident.

<u>HOW TO AVOID THE HAZARD</u>

Always adjust the shock absorbers on the left and right side to the same setting.

⚠WARNING

These shock absorber assemblies contain highly pressurized nitrogen gas, read and understand the following information before handling the shock absorber assemblies.

- **Do not tamper with or attempt to open the cylinder assemblies.**
- **Do not subject the shock absorber assemblies to an open flame or other high heat source. This may cause the unit to explode due to excessive gas pressure.**
- **Do not deform or damage the cylinders in any way. Cylinder damage will result in poor damping performance.**
- **Do not dispose of a damaged or worn out shock absorber assembly yourself. Take the shock absorber assembly to a HSUN dealer for any service.**

The spring preload, rebound damping and compression damping forces of the front and rear shock absorber assemblies can be adjusted to suit the operating conditions.

NOTE

Never turn an adjusting mechanism beyond the minimum and maximum settings.

■ Spring Preload

1. Loosen the locknut.
2. Turn the spring preload adjusting nut in

■ Rebound Damping Force

Turn the rebound damping force adjusting screw in direction **S** to increase the rebound damping

direction ⓐ to increase the spring preload and thereby harden the suspension, and in direction ⓑ to decrease the spring preload and thereby soften the suspension.

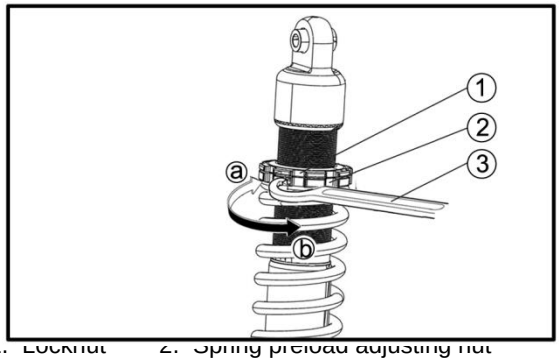

1. Locknut 2. Spring preload adjusting nut
3. Special wrench

- A special wrench can be obtained at a HSUN dealer to make this adjustment.
- The spring preload setting is determined by measuring distance A, shown in the illustration. The shorter distance A is, the lower the spring preload; the longer distance A is, the higher the spring preload. With each complete turn of the adjusting nut.

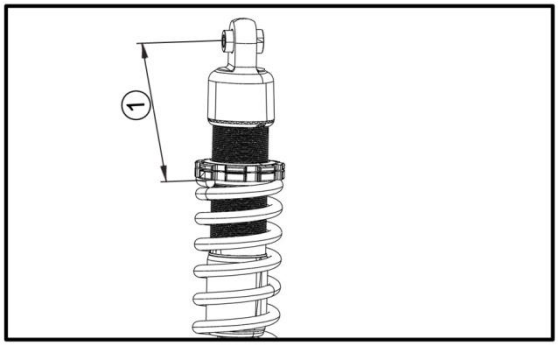

1. Distance A

3. Tighten the locknut.

NOTE

Always tighten the locknut against the adjusting nut, and then tighten it to the specified torque.

compression damping force adjusting force and thereby harden the damping, and in direction **F** to decrease the rebound damping force and thereby soften the damping.

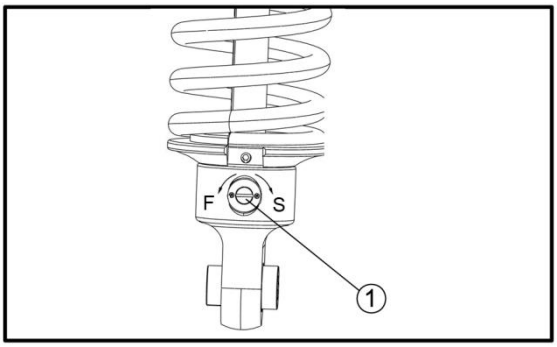

1.Rebound damping force adjusting screw

■ **Compression Damping Force**

Turn the compression damping force adjusting screw (use 3.0 allen wrench) in direction ⓐ to increase the compression damping force and thereby harden the damping, and in direction ⓑ to decrease the compression damping force and thereby soften the damping.

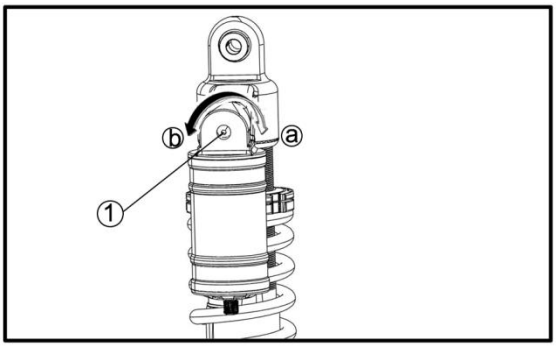

① Compression damping force adjusting screw

WARNING

- **Suspension components become hot during operation. Never touch the**

■**Rear End**

Jack the rear only after placing a wooden block under the right and left frame tubes for securing the engine and then supporting it.

screw, the rebound damping force adjusting screw or the oil reservoir with your bare hand or skin until suspension components have cooled.

- **Always adjust the shock absorber assemblies on the left and right side to the same setting. Uneven adjustment can cause poor handling and loss of stability, which could lead to an accident.**

JACK POSITIONING

WARNING

To avoid personal injury, death or vehicle damage:

- **Do not work under the vehicle unless it is secured by safe stands or suitable blocking.**

■Front End

Jack stand at the front bumper only.

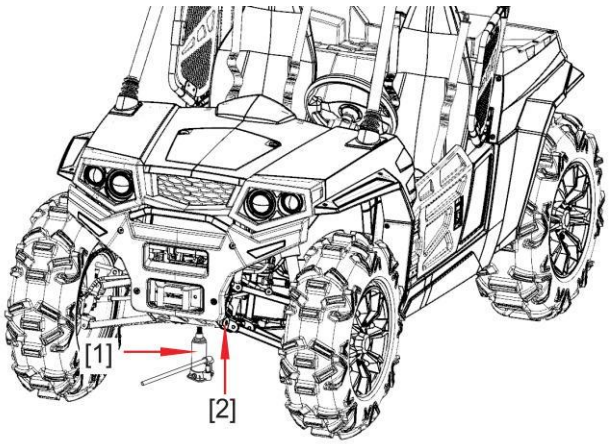

[1] Jack [2] Front bumper

Do not apply jack pressure on the steel plate directly under the engine.

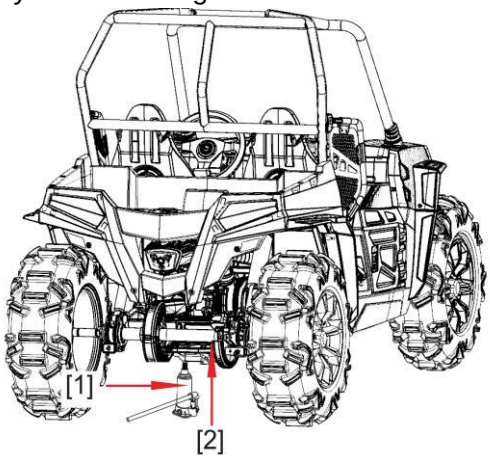

[1] Jack

PRE-OPERATION CHECK

For your own safety and maximum service life of the vehicle, make a thorough daily inspection before starting the engine or operating the vehicle.

CAUTION

To avoid personal injury:

- **Be sure to check and service the vehicle on a flat surface with the engine off and the parking brake "ON".**

■Walk Around Inspection

Look around and under the vehicle for such items as loose bolts, trash build-up, oil or coolant leaks, broken or worn parts.

■Checking and Refueling

CAUTION

To avoid personal injury:

- **Do not smoke while refueling.**
- **Be sure to stop the engine before refueling.**

1. Turn the key switch to “ON”, check the amount of fuel by the fuel gauge.
2. Fill fuel tank when fuel gauge shows1/4 or less fuel in the tank.

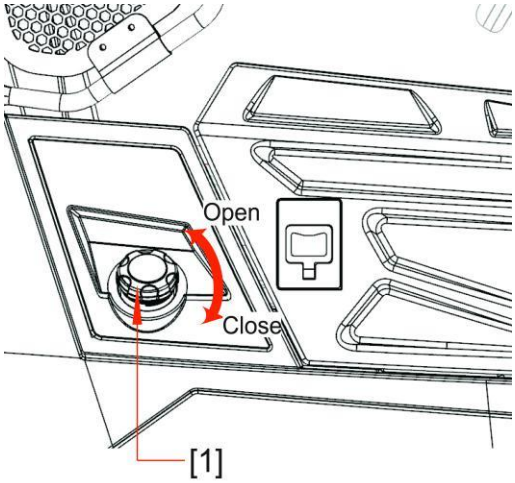

[1] Fuel cap

Fuel tank capacity	13.5L

IMPORTANT

If oil level is low, do not run the engine.

Checking engine oil level

1. Park the vehicle on a flat surface, raise the cargo bed if applicable, apply the parking brake, and shut off engine.
2. To check the oil level, draw out the dipstick, wipe it clean, replace it, and draw it out again, check to see if the level is too low, add new oil to the prescribed level on the dipstick.

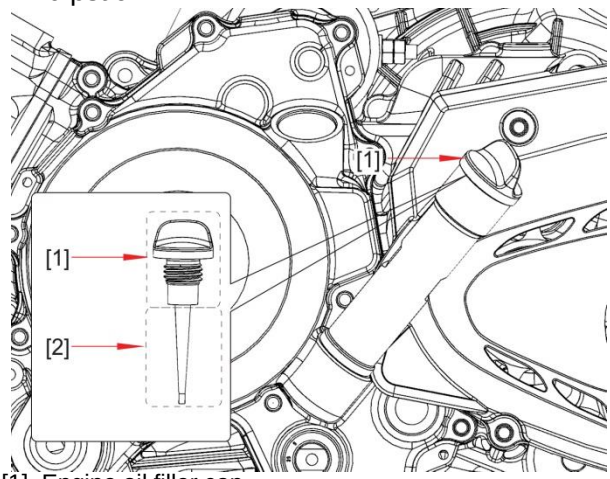

[1] Engine oil filler cap

[2] Dipstick

3. See Figure for oil recommendations.

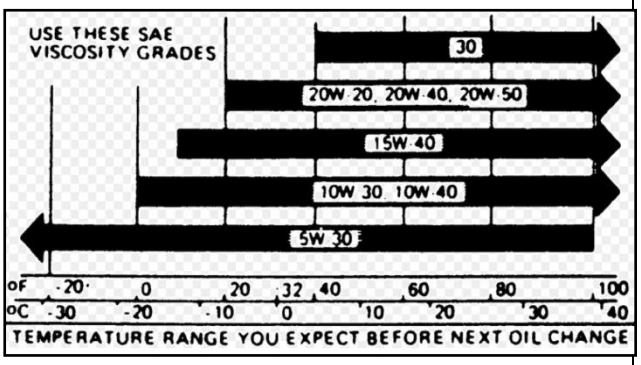

■Checking Coolant Level

CAUTION

TO avoid personal injury

Do not remove radiator cap while coolant is hot. is hot . Allow sufficient time for engine and coolant to cool prior to removing the cap.

- ◆ Park the vehicle on a flat surface, access the panel under the hood, set the parking brake, and shut off the engine.
- ◆ Check to see that the coolant level is between the “FULL” and” LOW” marks of recovery tank.
- ◆ When the coolant level drops due to evaporation, add coolant only up to the full level. In case of leakage add anti-freeze and water in the specified mixing ratio up to the full level.(see flush cooling system and changing coolant in EVERY 2 YEARS in PERIODIC SERVICE section)

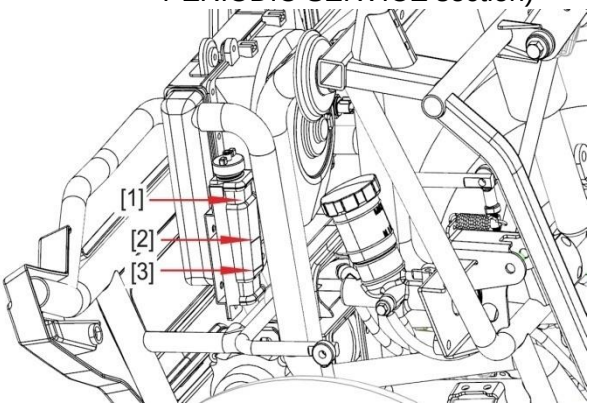

[1] Recovery tank
[2] FULL
[3] LOW

IMPORTANT

- If the radiator cap has to be removed, follow the cautions above and securely retighten the cap.
- Use clean fresh water and anti-freeze to fill the recovery tank.
- If water should leak, consult Coleman Powersports Customer Support.

■Cleaning radiator screen

⚠CAUTION

TO avoid personal injury:

- **Be sure to stop the engine before removing the screen**

1. Park the vehicle on a flat surface,
2. Remove the radiator cover,
3. Detach the screen and remove all foreign materials,

IMPORTANT

Radiator screen must be cleaned from debris to prevent engine from overheating.

■Checking brake fluid level

⚠CAUTION

TO avoid personal injury:

- **Never operate the vehicle if the brake fluid is below the minimum mark.**
- **Use only DOT3 from a sealed container. Other types of brake fluid may ruin synthetic resin or rubber installed in brake system components and may cause brake failure.**
- **Avoid contamination of the brake fluid thoroughly by thoroughly cleaning housing prior to removing the filler cap. Do not open the brake fluid reservoir cap unless absolutely necessary.**
- **Use extreme care when filling the reservoir. If brake fluid spills on the power steering hose, wash it off with water immediately, as brake fluid quickly ruins synthetic resin or rubber hoses.**

1. Park the vehicle on a level ground and open the hood.
2. Check to see that the brake fluid level is up to the LOWER mark.
3. If it is below the “LOWER” mark add brake fluid .

■Checking brake pedal

CAUTION

TO avoid personal injury:

- **Stop the engine and chock the wheels before checking brake pedal.**

1.Inspect the brake pedal for free play and smooth operation.

Adjust if incorrect free play is found. (see checking brake pedal in” EVERY 200 HOURS in PERIODIC SERVICE section)

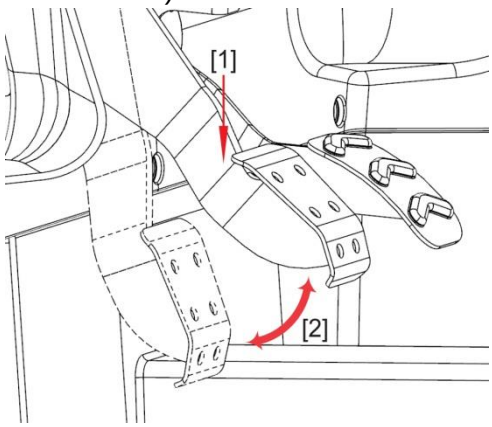

[1] Brake pedal [2] PEDAL STROKE

■Checking parking brake

Pull the parking brake lever to apply the brakes with the key switch in the "ON" position and the parking brake indicator should come on.

To release the brake, push in the button on the tip of the parking brake lever and tilt the lever down.

NOTE

Make sure the parking brake warning lamp on the display goes off when parking brake lever is down.

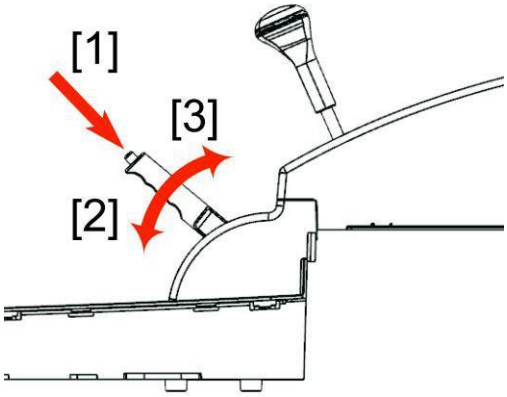

[1] Release button
[2] RELEASE
[3] PULL

■Checking gauges and indicator lights

1. Inspect the instrument panel for proper operation.
2. Replace if broken.

■Checking head light turn signal light etc

1. Inspect lights for broken bulbs and lenses
2. Replace if broken

■Checking seat belt and ROPS

1. Always check condition of seat belt and ROPS attaching hardware before operating vehicle.
2. Replace if damaged.

■Checking tire inflation pressure

Though the tire pressure is factory-set to the prescribed level, it naturally drops slowly in the course of time, thus check it every day and inflate as necessary.

tire sizes	inflation pressure
Front : 22x7−10	49kPa (0.49kgf/cm^2, 7psi)
Rear:22x10−10	49kPa (0.49kgf/cm^2, 7psi)

EVERY 50 HOURS

■Greasing

Apply a small amount of multi-purpose grease to the following points every 50 hours. If you operated the vehicle in extremely wet and muddy conditions lubricate grease fittings more often.

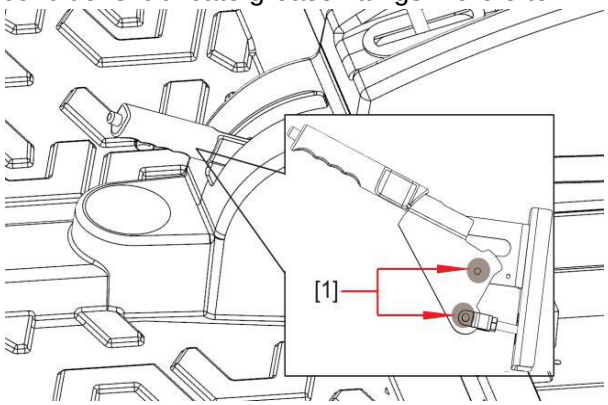

[1] Parking brake pivot (spray type grease)

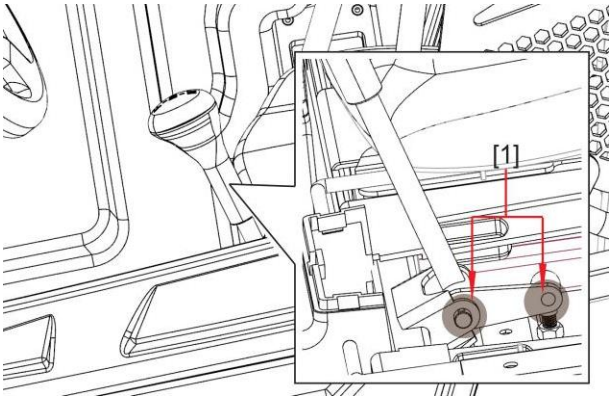

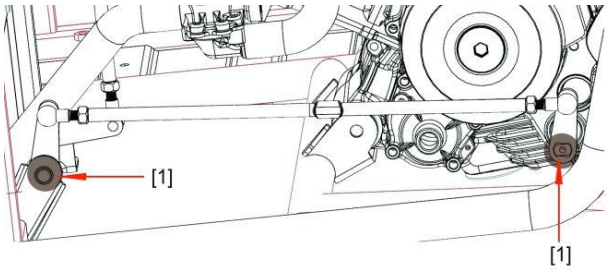

[1] Gear shift lever pivot (spray type grease)

■Checking engine start system

⚠CAUTION

TO avoid personal injury

- **Do not allow anyone near the vehicle while testing.**
- **If the vehicle does not pass the test, do not operate the vehicle.**

◆Preparation before testing

1. Place all control levers in the “NEUTRAL” position.
2. Set the parking brake and stop the engine.

◆Test Gear shift range lever safety switch

1. Sit on the operator’s seat.
2. Shift the gear shift range lever to: “L”, “H”, or REVERSE position.
3. Turn the key to “START” position.
4. The engine must not crank.
5. If it cranks consult your local dealer for this service.

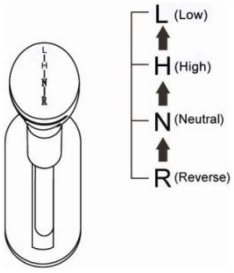

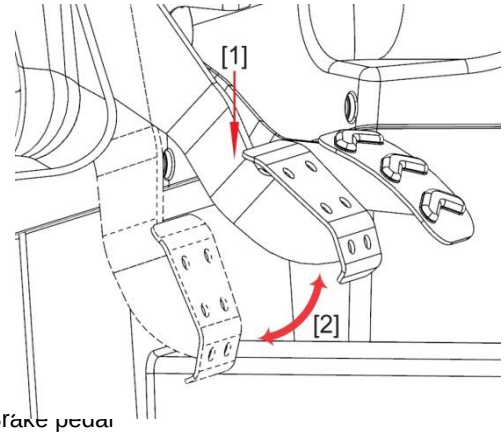

[1] Brake pedal

[2] Accelerator pedal

■**Checking wheel bolt torque**

CAUTION

To avoid personal injury

- **Never operate vehicle with loose wheel bolts.**
- **Any time these bolts are loosened they should be retightened to the specified torque.**
- **Check all bolts frequently and keep them tight.**

Check wheel bolts regularly especially when new.

If they are loose tighten to:

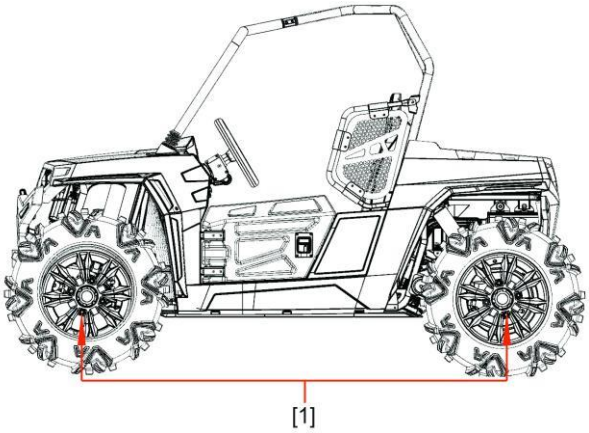

①Torque wheel bolts to 80 N.m

■**Cleaning air cleaner primary element**

1. Remove the air cleaner cover and primary element.
2. Clean the primary elements.

1） When dry dust adheres to the element blow compressed air from the inside turning the element. Pressure of compressed air must be under 205kpa.

2） When carbon or oil adheres to the element soak the element in detergent for 15 minutes then wash it several times in water rinse with clean water and dry it naturally after element is fully dried inspect inside of the element with a light and check if it is damaged or not.

3） Replace the primary element

Once yearly or after every sixth cleaning, whichever comes first.

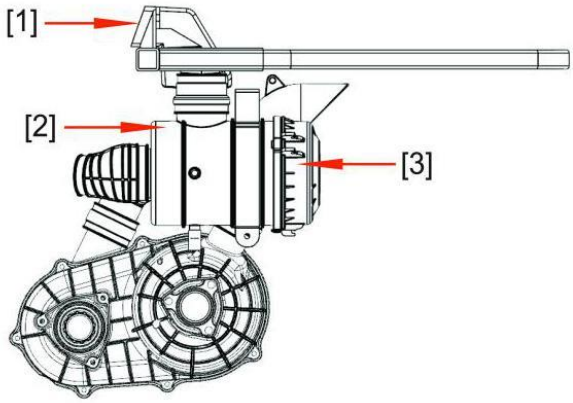

[1] First air cleaner

[2] Primary element [3] Cover

IMPORTANT

- The air filter uses a dry element . Never apply oil.
- Do not run the engine with air filter removed.

- Be sure to install cover properly prior to operation. Improper secured cover will allow dirt and air into engine causing idle issues and potentially damage engine.

◆ **Air Filter Cover**

Open the air filter cover once a week under ordinary conditions –or daily when used in a dusty place-to get rid of large particles of dust and dirt.

Check fuel line and fuel filter.

⚠CAUTION

To avoid personal injury:

- **Be sure to stop the engine and remove the key when attempting to make the following checks and changes.**
- **Never fail to check the fuel lines periodically the fuel lines are subject to wear and aging fuel may leak out onto the running engine causing a fire.**
- **The fuel line connections should be checked annually or every 100service hours whichever comes first.**

1. Park the vehicle on a flat surface and raise the cargo bed.
2. The fuel line is made of rubber and ages regardless of service period.
3. If the fuel line and clamps are found to be damaged or deteriorated replace them.
4. Check fuel filter if it is clogged by debris or contaminated with water replace it.

IMPORTANT

When the fuel line is disconnected for maintenance or repair, close both ends of the fuel line with a piece of clean cloth or paper to prevent dust and dirt from entering. Particular, care must be taken not to admit dust and dirt into the fuel pump entrance. Even a small amount of dust or dirt will cause premature wear and malfunction of the fuel pump and injector components.

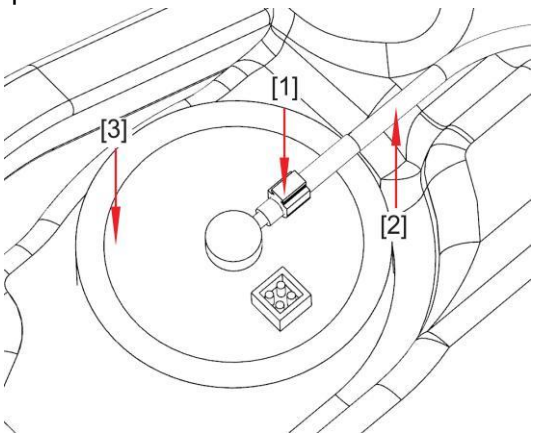

[1] Pipe clamp [2]fuel line
[3] fuel pump

5. To remove the in-line fuel filter clamps (b), slide the clamps (b) away from the in-line fuel filter (a). Twist and pull the fuel lines off of the in-line fuel filter (a).

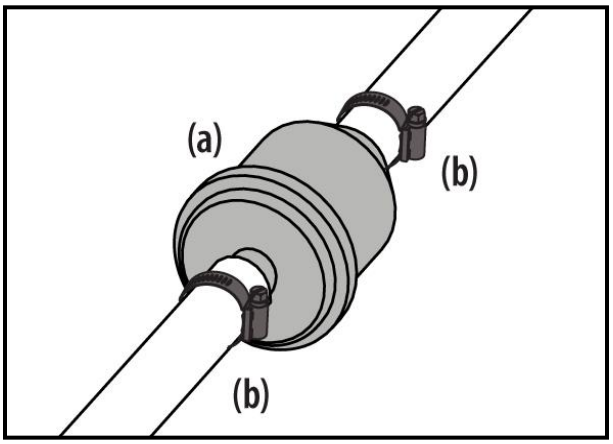

Check the in-line filter (a) for debris and/or water contamination. Replace as necessary

■**Checking battery condition**

DANGER

If you store a battery in a diminished state of charge you will probably have to replace the battery.

CAUTION

To avoid personal injury

- **Never remove the battery while the engine is running.**
- **Keep electrolyte away from eyes, hands and clothes. If you are spattered with it, wash it away completely with water immediately and get medical attention.**
- **Wear eye protection and rubber gloves when working around the battery.**

The factory –installed battery is a non-refillable type if the battery is weak, charge the battery or replace it with new one.

◆**Battery charging**

CAUTION

To avoid personal injury

- **When the battery is being activated, hydrogen and oxygen gases in the battery are extremely explosive. Keep open sparks and flames away from the battery at all times, especially when charging the battery.**
- **When disconnecting the cable from the battery start with the negative terminal first; when connecting the cable to the battery start with the positive terminal first.**

Always check battery charge by using a voltmeter.

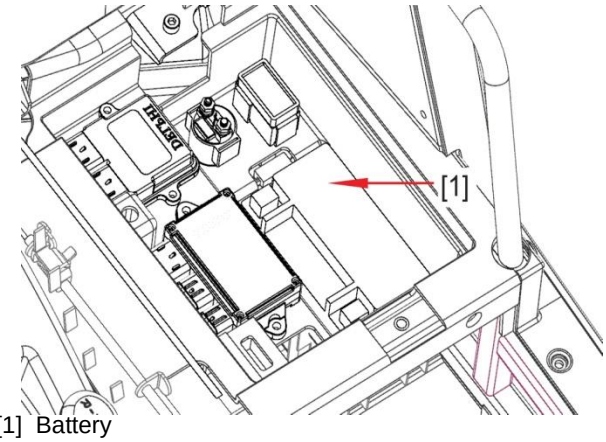

[1] Battery

1. To slow charge the battery connect the battery positive terminal to the charger positive terminal and the negative to the negative, then recharge in the standard fashion.
2. A boost charge is only for emergencies it will partially charge the battery as early as possible.
3. When exchanging an old battery for a new one use battery of equal specification shown in table 1.

Battery type	Volts
GTX9BS	12

◆**Direction for storage**

1. When storing the vehicle for a long period, remove the battery from the vehicle, store in a dry place out of direct sunlight.
   The battery will self-discharge while it is stored; recharge it once every three months in hot seasons and once every six months in cold seasons.

■**Adjusting toe-in**

Proper toe-in	0 to12 mm (0 to 0.47 in)

1. Park vehicle on flat place.
2. Turn steering wheel so front wheels are in the straight ahead position.
3. Lock the park brake and stop the engine.
4. Measure distance between tire beads at rear of tire at hub height.
5. Front distance should be shorter than rear distance if not adjust tie rod length.

◆**Adjusting procedures**

1. Loosen the lock nut and turn the tie rod to adjust the rod length until the proper toe-in measurement is obtained.
2. Retighten the lock nut.

IMPORTANT

- Keep the equal length of the left and right tie-rod.

■**Cleaning Muffler**

CAUTION

To avoid personal injury:

- **Before touching any part of an exhaust system, be absolutely sure that it has sufficient time to cool!**
- **Always wear safety goggles and facemask.**
- **The particulate matter contained in the muffler contains chemicals that are harmful to people, animals and marine life. If you are unable to do this work, have it done by your dealer.**

- **Cleaning spark arrester of muffler.**

Maintenance & cleanout procedure:

The screen type spark arrester should be removed, cleaned, and inspected after every 100 hours of use.

1. The spark arrester is located inside of the exhaust pipe, and fastened with six bolts.
2. Loosen the bolts and remove the spark arrester.
3. Shake loosened particles out of the screen assembly and lightly clean the screen with wire brush. Soak in solvent and again clean with wire brush if necessary.
4. If any breaks in the screen or welds are discovered, the assembly must be replaced.
5. Return the spark arrester to the muffler body and refasten the bolts.

IMPORTANT:

- Visually check the muffler for cracks or holes in the body, welds or pipes at regular intervals.
- USDA approval requires clearance between spark arrester sleeve and exhaust pipe to be no larger than 0.023”(0.584 mm).
- Replace the entire muffler if it is damaged.
- Do not operate the vehicle with a damaged muffler.

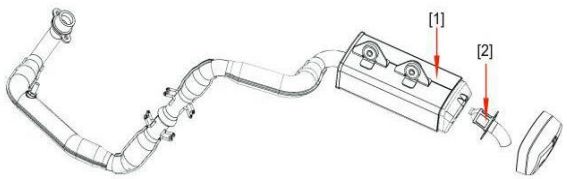

EVERY 200 HOURS

■Changing Engine Oil

CAUTION

To avoid personal injury:

- **Be sure to stop the engine before replacing oil.**
- **Allow engine to cool down sufficiently, oil can be hot and can burn.**

1. Park the vehicle on flat surface and raise the cargo bed.
2. To drain the used oil, remove the drain plug at the bottom of the engine and completely drain the oil into an oil pan.
3. After draining, reinstall the drain plug.
4. Insert the dipstick into the oil filler hole, and then tighten the oil filler cap. (See “LUBRICANTS, FUEL AND COOLANT” in “MAINTENANCE” section.)

Oil capacity	with filter change	1.2L (1.26U.S. qts.)
	without filter change	1.0L (1.05U.S. qts.)

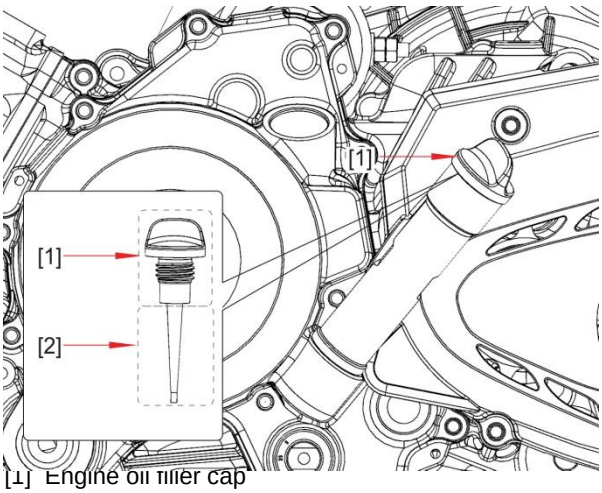

[1] Engine oil filler cap
[2] Dipstick

5. See Figure for oil recommendations.

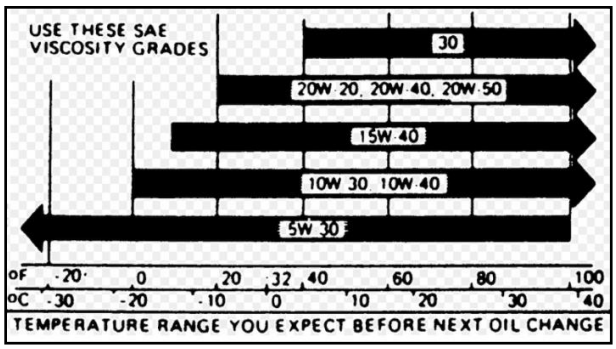

■Replacing Engine Oil Filter

CAUTION

To avoid personal injury:

- **Be sure to stop the engine before changing the oil filter cartridge.**
- **Allow engine to cool down sufficiently, oil can be hot and can burn.**

1. Park the vehicle on a flat surface and raise the cargo bed.
2. Remove the oil filter.
3. Put a film of clean engine oil on the rubber seal of the new filter.
4. After the new filter has been replaced, the engine oil normally decreases a little. Make sure that the engine oil does not leak through the seal and check the oil level on the dipstick. Then replenish the engine oil up to the prescribed level.

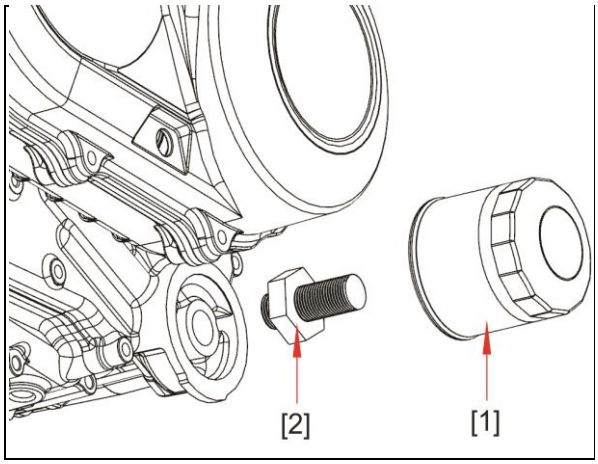

[1] Engine oil filter

[2] Bolt

IMPORANT:

- To prevent serious damage to the engine, use only a genuine filter.

■Checking Brake Pedal

CAUTION

- Stop the engine and chock the wheels before checking brake pedal.
- If movement is outside of the specifications contact your local dealer for adjusting the brake.
-

◆Checking the brake pedal free travel

Proper brake pedal free travel	7 to 14mm (0.3 to in.)On the pedal

1. Release the parking brake.
2. Slightly depress the brake pedal and measure free travel at the top of the pedal stroke.
3. If brake pedal free travel is outside of the specifications, contact your local dealer for adjusting the brake.

◆ Checking the brake pedal stroke

Pedal stroke	Less than 120mm(4.7in.) On the pedal

1. Release the parking brake.
2. Step on the pedal and measure the pedal stroke.
3. If brake pedal stroke is outside of the specifications, contact your local dealer for adjusting the brake.

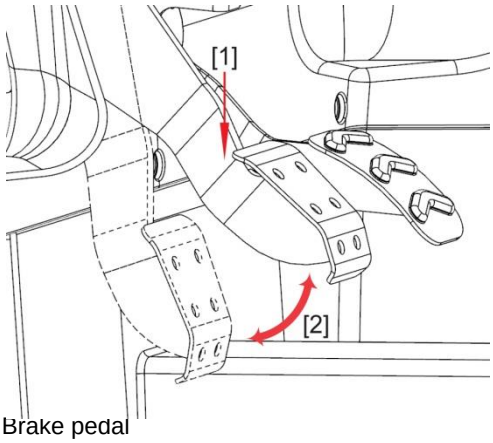

[1] Brake pedal

[2] “PEDAL STROKE”

■Checking Brake Hose and Lines

1. Check to see that brake hose and lines are not swollen, hardened or cracked.
2. Check the brake hose and pipe joints for oil leaks.
3. If there is any abnormality, consult your local dealer for this service.

■Checking Brake Light Switch

1. Park the vehicle on a flat surface and raise the cargo bed.
2. Turn the key switch to the “ON” position.
3. Step on the brake pedal to check if the brake light comes on.

4. If it does not, check the bulb or brake light switch.

■Checking Radiator Hose and Clamp

Park the vehicle on a flat surface and raise the cargo bed. Check to see if radiator hoses are properly fixed every 200 hours of operation or six months, whichever comes first.

1. If hose clamps are loose or water leaks, tighten bands securely.
2. Replace hoses and tighten hose clamps securely, if radiator hoses are swollen, hardened or cracked. Replace hoses and hose clamps every 2 years or earlier if checked and found that hoses are swollen, hardened or cracked.

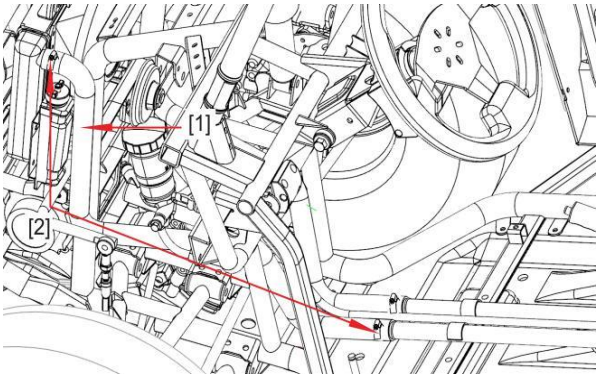

[1] Radiator hose [2] Clamp bands

◆Precaution on Overheating

Take the following actions in the event the coolant temperature gauge is showing red bars.

1. Stop the vehicle operation in a safe place and keep the engine unloaded idling.
2. Don't stop the engine suddenly, but stop it after about 5 minutes of idling.
3. Do not open radiator cap until engine has sufficiently cooled down.
4. Inspect radiator for debris in screen /
5. clogged radiator fins, coolant level in radiator and proper coolant fan operation. Correct any of these findings
   and restart engine. Allow it to get to normal operation temperature to ensure
   issue has been corrected.

■Checking Intake Air Tube

1. Check to see if the hoses and hose clamps are tight and not damaged.
2. If hoses and clamps are found to be worn or damaged, replace or repair them at once.

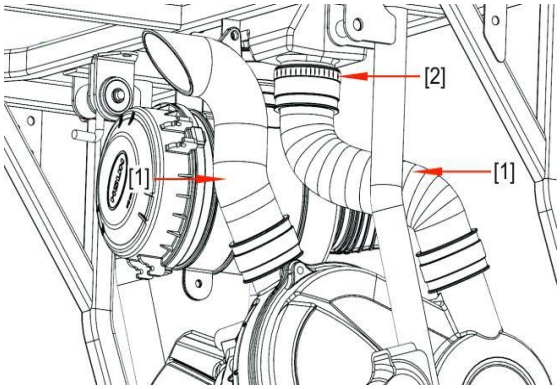

[1] Hose [2] Hose clamp

EVERY 300 HOURS

■Checking Tire

1. Check to see if tires are not damaged.
2. If the tires are cracked, bulged, or cut, or they are worn out, replace or repair them at once.

◆Tire Tread Depth

Always replace the tires when the tread depth is worn to minimum allowable.

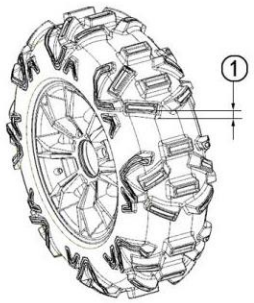

①3mm(0.12in)

EVERY 500 HOURS

■Replacing Fuel Filter

Consult your local dealer for this service.

EVERY 600 HOURS

■Adjusting Engine Valve Clearance

Consult your local dealer for this service.

EVERY 1500 HOURS

■Checking Injection and Fuel Pump

Consult your local dealer for this service.

EVERY 1 YEAR

■Refer to Service Interval Chart on page 9-2

EVERY 2 YEARS

■Refer to Service Interval Chart on page 9-2

■ Flushing Cooling System and Changing Coolant

CAUTION

To avoid personal injury:

- **Do not remove the radiator cap while coolant is hot. When cool, slowly rotate cap to the first stop and allow sufficient time for excess pressure to escape before removing the cap completely.**

1. Stop the engine and let cool down.
2. To drain the coolant, open the radiator drain plug and remove radiator cap. The radiator cap must be removed to completely drain the coolant.
3. After all coolant is drained, close the drain plug.
4. Fill with clean water and cooling system cleaner.
5. Follow directions on the cleaner container.
6. After flushing, fill with clean water and anti-freeze until the coolant level is just below the radiator cap. Install the radiator cap securely.
7. Fill with fresh water up to the “FULL” mark on the recovery tank.
8. Start and operate the engine for few minutes.
9. Stop the engine and let cool.
10. Check coolant level of recovery tank and add coolant if necessary.

Coolant capacity	2.2L(2.3U.S.qts.)

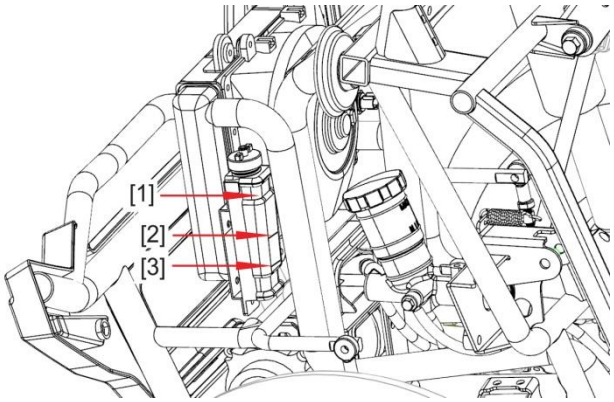

[1] Recovery tank [2]“ FULL”
[3] “ LOW”

IMPORTANT:

- Do not start engine without coolant.
- Use clean, fresh water and anti-freeze to fill the radiator and recovery tank.
- When the anti-freeze is mixed with water, the antifreeze mixing ratio must be less than 50%.
- Securely tighten radiator cap. If the cap is loose or improperly fitted, water may leak out and the engine could overheat.

■Anti-Freeze

CAUTION

To avoid personal injury:

- When using antifreeze, put on some protection such as rubber gloves.(Antifreeze contains poison.)
- If you should drink antifreeze, throw up at once and seek medical attention.
- When antifreeze comes in contact with the skin or clothing, wash it off immediately.。
- Do not mix different types of Antifreeze.
  The mixture can produce chemical reaction causing harmful substances.
- Antifreeze is extremely flammable and explosive under certain conditions. Keep fire and children away from antifreeze.
- When draining fluids from the engine, place some container underneath the engine body.
- Do not pour waste onto the grounds, down a drain, or into any water source.
- Also, observe the relevant environmental protection regulations when disposing of antifree

If it freezes, coolant can damage the cylinders and radiator. If the ambient temperature falls below 0℃(32˚F) or before a long-term storage, let out cooling water completely, or mix fresh water with long-life coolant and fill the radiator and recovery tank with the mixture. •

1. Long-life coolant (hereafter LLC) comes in several types. Use ethylene glycol(EG) type for this engine.
2. Before employing LLC-mixed cooling water, fill the radiator with fresh water and empty it again.
   Repeat this procedure 2 or 3 times to clean up the inside.
3. Mixing the LLC
4. The procedure for the mixing of water and antifreeze differs according to the make of the antifreeze and the ambient temperature. Refer to SEA J1034 standard, more specifically also to SAE J814c.

IMPORTANT:

- When the antifreeze is mixed with water, the antifreeze mixing ratio must be less than 50%.

VOL% Anti-freeze	Freezing point		Boiling point	
	℃	˚F	℃	˚F
40	-24	-12	106	222
50	-37	-34	108	226

*At1.013×10^5Pa(760mmHg) pressure (atmospheric).

A higher boiling point is obtained by using a radiator pressure cap which permits the development of pressure within the cooling system.

5. Adding the LLC

1) Add only water if the mixture reduces in amount by evaporation.

2) If there is a mixture leak, add the LLC of the same manufacturer and type in the same mixture percentage.

*Never add any long-life coolant of different manufacturer.(Different brands may have different additive components, and the engine may fail to perform as specified.)

6. When the LLC is mixed, do not employ any radiator cleaning agent. The LLC contains anticorrosive agent. If mixed with the cleaning agent, sludge may build up, adversely affecting the engine parts.

7. The vehicle's genuine long-life coolant has a service life of 2 years. Be sure to change the coolant every 2 years.

NOTE:

- The above data represent industry standards that necessitate a minimum glycol content in the concentrated antifreeze.
- When the coolant level drops due to evaporation, add water only to keep the antifreeze mixing ratio less than 50%. In case of leakage, add antifreeze and water in the specified mixing ratio before filling into the radiator.

■Replacing Radiator Hose (Water pipes)

Replace the hoses and clamps.

(See "Checking Radiator Hose and Clamp" in "EVERY 200 HOURS" in "PERIODIC SERVICE" section.)

■Replacing Fuel Hose

Consult Coleman Powersports Customer Service Support.

■ **Replacing Brake Master Cylinder (Inner parts)**Consult your local dealer for this service.

■Replacing Front Brake Seal

Consult your local dealer for this service.

■Replacing Rear Brake Cylinder Seal

Consult your local dealer for this service.

■Replacing Intake Air Line

Consult your local dealer for this service.

EVERY 4 YEARS

■Replacing Brake Hose

Consult your local Dealer for this service.

■Replacing Mini Fuses

The Mini fuses are intended to protect the electrical cabling. If any of them have blown out, be sure to pinpoint the cause.

■Replacing Light Bulb

1) Head lights

Take the bulb out of the light body and replace it with a new one.

2) Other lights

Detach the lens and replace the bulb

Light	Capacity
Head lights	2x35W
Tail light	2 x 5W
Brake light	2x21W
Instrument panel light	2W

STORAGE

⚠CAUTION

To avoid personal injury:

- **Do not clean the vehicle when the engine is running.**
- **To avoid the danger of exhaust fume poisoning, do not operate the engine in a closed building without proper ventilation.**
- **When storing, remove the key from the key switch to avoid unauthorized persons from operating the vehicle and getting injured.**

VEHICLE STORAGE

If you intend to store your vehicle for an extended period of time, follow the procedures outlined below.

These procedures will insure that the vehicle is ready to operate with minimum preparation when it is removed from storage.

1. Check the bolts and nuts for looseness and tighten if necessary.
2. Apply grease to vehicle areas where bare metal will rust also to pivot areas.
3. Unload from cargo bed.
4. Inflate the tire to a pressure a little higher than usual.
5. Change the engine oil and run the engine to circulate oil throughout the engine block and internal moving parts for about 5 minutes.
6. With all implements lowered to the ground, coat any exposed rods with grease(if equipped).
4. Check all fluid levels(engine oil, transmission oil, engine coolant, transmission coolant and
7. Remove the battery from the vehicle. Store the battery following the battery storage procedures.
8. Keep the vehicle in a dry place where the vehicle is sheltered from the elements. Cover the vehicle.
9. Keep the vehicle indoors in a dry area that is protected from sunlight and excessive heat. If the vehicle must be stored outdoors. Cover it with a waterproof tarpaulin.

   Put boards under the tires to keep dampness away from tire.

   Keep the tries out of direct sunlight and extreme heat.

IMPORTANT:

- When washing the vehicle, be sure to stop the engine.

  Allow sufficient time for the engine to cool before washing.
- Do not wash with a high-pressure car-washing machine.
- Cover the vehicle after the muffler and the engine have cooled down.
-

REMOVING THE VEHICLE FROM STORAGE

1. Check the tire air pressure and inflate the tires if they are low.
2. Before installing the battery, be sure it is fully charged.
3. Check to see if the fan works.

any attached implements). 5. Start the engine. Observe all gauges. If all gauges are functioning properly and reading normal, move the vehicle outside. Once outside, park the vehicle and let the engine idle for at least five minutes. Shut the engine off and work around vehicle and make a visual inspection looking for evidence of oil or water leaks. 6. With the engine fully warmed up. Release the parking brake and test the brakes for proper adjustment as you move forward. Adjust the brake as necessary.	

Troubleshooting

ENGINE TROUBLESHOOTING

If something is wrong with the engine, refer to the table below for the cause and its corrective countermeasure.

Trouble	Cause	Countermeasure
Engine is difficult to start or cannotstart.	● No fuel flow	● Check the fuel tank and fuel filter。 ● Check the electric fuel pump. ● Check the injector. ● Check the ECU with Motor Scan KF90121 ● Replace filter electric fuel pump injector and ECU If necessary.
	·Water is in the fuel system	● Check to see if the fuel tank cover is tight.
	● In winter, oil viscosity increases, And Engine revolution is slow.	● Use oils of different viscosities, depending on ambient temperatures.
	● Battery becomes weak and the engine does not turn over quick enough.	● Clean battery cables and terminals. ● Charge the battery. ● In cold weather(-15℃),always remove the battery from the vehicle, charge and store it indoors. install it on the vehicle only when the vehicle is going to be used。
Enginepower is insufficient	● Insufficient fuel. ● The injector is clogged. ● Crankshaft position sensor is Bad. ● The air cleaner is clogged. ● Spark plug is dirty or fouled. ● Ignition coil is bad.	● Check the fuel system. ● Clean or replace the injector. ● Replace crankshaft position sensor. ● Clean or replace the air cleaner. ● Clean or replace the spark plug. ● Replace the ignition coil.
Engine stops suddenly	● Check with the diagnostic instrument (Motor Scan KF90121).	
Engine overheats	● Engine overloaded	● Shift to lower gear or reduce load.
	● Low coolant level.	● Fill cooling system to the correct level; ● Check radiator and hoses for loose connections or leaks.
	● The motor driven fan does not turn.	● Check to see if the fuse is blown. ● Check the electrical system.
	● Dirty radiator core or grille screens.	● Remove all trash.
	● Coolant flow route corroded.	● Flush cooling system.

If you have any questions, consult your local dealer.

Troubleshooting

Diagnostic Trouble Code Table

MT05 ECU Malf Code Table:23	
Malf code in MT05	Description
P0107	MAP Circuit Low Voltage or Open
P0108	MAP Circuit High Voltage
P0112	IAT Circuit Low Voltage
P0113	IAT Circuit High Voltage or Open
P0117	Coolant/Oil Temperature Sensor Circuit Low Voltage
P0118	Coolant/Oil Temperature Sensor Circuit High Voltage or Open
P0122	TPS Circuit Low Voltage or Open
P0123	TPS Circuit High Voltage
P0131	O2A Circuit Low Voltage
P0132	O2A Circuit High Voltage
P0031	O2A Heater Circuit High Voltage
P0032	O2A Heater Circuit Low Voltage
P0201	Injector 1 Circuit Malfunction
P0202	Injector 2 Circuit Malfunction
P0230	FPR Coil Circuit Low Voltage or Open
P0232	FPR Coil Circuit High Voltage
P0336	CKP Sensor Noisy Signal
P0337	CKP Sensor No Signal
P0351	Cylinder 1 Ignition Coil Malfunction
P0352	Cylinder 2 Ignition Coil Malfunction
P0505	Idle Speed Control Error
P0562	System Voltage Low
P0563	System Voltage High
P0650	MIL Circuit Malfunction
P1693	Tachometer Circuit Low Voltage
P1694	Tachometer Circuit High Voltage

If you have any questions, consult your local dealer.

Troubleshooting

BATTERY TROUBLESHOOTING

Trouble	Cause	Countermeasure	Preventive measure
Starter does not function	● Battery overused until lights are dim.	● Charge the battery sufficiently.	● Charge the battery properly.
	● Battery has not been recharged.		
	● Poor terminal connection	● Clean the terminal and tighten securely.	● Keep the terminal clean and tight. Apply grease and treat with anti-corrosive.
	● Battery life expired	● Replace new battery	
From beginning starter does not function,and lights soon become dim	● Insufficient charging	● Charge battery Insufficiently	● Battery must be serviced properly before initial use
When viewed from the top of plates, look whitish. * Refillable type battery only	● Battery was used with an insufficient amount of electrolyte.	● Add distilled water and charge the battery.	● Regularly check the electrolyte level.
	● Battery was used with too much without recharging.	● Charge battery Insufficiently	● Charge battery properly
Recharging is impossible.	● Battery life expired.	● Replace battery.	
Terminals are severely corroded and heat up.	● Poor terminal connection	● Clean the terminal and tighten securely.	● Keep the terminal clean and tight. Apply grease and treat with anti-corrosives.
Battery electrolyte level drops rapidly. * Refillable type battery only	● There is a crack or pin holes in the electrolytic cells.	● Replace battery.	
	● Charging system trouble.	● Consult your local dealer.	

- If you have any questions, consult your local dealer.
- The factory installed battery is non-refillable type.

Troubleshooting

MACHINE TROUBLESHOOTING

Trouble	Cause	Countermeasure
Gear Shifter not Operational	● High idling speed of engine	● Replace throttle cable; ● Replace throttle petal ● Replace the throttle
	● High rotary speed for clutch connection.	● Replace he junior clutch spring; ● Replace the primary clutch.
	● Gear shift cable out of adjustment	● Put the gearshift rod into the position of “N”. ● Put the gearshift arm of engine into ”N”. ● Adjust the cable and the bolt. ● Lock tightly.
	● Gear abrasion	● Replace the gears
Transmission noise	● Tolerance between inner & outer gears out of tolerance.	● Replace the gears
Low vehicle speed or power	● Parking brake engaged	● Adjust cable
	● CVT belt slipping	● Replace CVT transmission belt Replace the clutch.
Soft / No Brakes	● Low brake fluid	● Check the brake fluid level
	● Air in brake lines	● Contact Dealer.
	● Brake discs worn	● Contact Dealer.
	● Caliper bolt loose	● Secure bolt

If you have any questions, consult your local dealer.

ACCESORIES

Consult your local dealer for additional accessories to add to your vehicle:

1. Heavy Duty Front and Rear Bumpers
2. Front Basket
3. Hard Cab Enclosure
4. Soft Cab Enclosure
5. Snow Plow
6. LED Lights
7. Spare Tire Carrier

Hisun Motors Corp., U.S.A. Emission Control System Warranty Statement

YOUR WARRANTY RIGHTS AND OBLIGATIONS

The U.S. Environmental Protection Agency and **Hisun Motors Corp., U.S.A.** (hereinafter "**HISUN**") are pleased to explain the emission control system warranty on your Off-Road vehicle. New off-road motor vehicles must be designed, built and equipped to meet U.S. EPA Federal and California anti-smog standards. HISUN must warrant the emission control system on your vehicle for 5,000 km, or at least 30 months, whichever comes first, provided that there has been no abuse, neglect or improper maintenance of your vehicle. This off-road vehicle was designed to meet the emission standards for 10,000 km, or five years, whichever comes first.

Your emission control system warranty covers components whose failure would increase an engine's emissions of any regulated pollutant

Where a warrantable condition exists, HISUN will repair your vehicle at no cost to you, including diagnosis, parts and labor.

If an emission-related part on your vehicle is defective, the part will be repaired or replaced by HISUN. This is your EMISSION CONTROL SYSTEM WARRANTY.

NOTICE! Use of this vehicle in any type of competitive event completely and absolutely voids this and all other warranties offered by HISUN.

OWNER'S WARRANTY RESPONSIBILITIES

As the vehicle owner, you are responsible for the performance of the required maintenance listed in your owner's manual. HISUN recommends that you retain all receipts covering maintenance on your vehicle, but HISUN cannot deny warranty solely for the lack of receipts or for your failure to ensure the performance of all scheduled maintenance.

You are responsible for presenting your vehicle to the HISUN dealer as soon as a problem exists. The warranty repairs should be completed in a reasonable amount of time, not to exceed 30 days.

As the vehicle owner, you should be aware that HISUN may deny your warranty coverage if your vehicle or a part has failed due to abuse, neglect, improper maintenance or unapproved modifications.

If you use your vehicle in any type of competitive event, this warranty is immediately and completely void.

If you have any questions regarding your warranty rights and responsibilities, you should contact Hisun Motors Corp., U.S.A., 310 E, University Drive, McKinney, TX 75069 (Phone: 972-446-0760 or Toll Free: 877-838-6188), or the U.S. Environmental Protection Agency at 2000 Traverwood Drive, Ann Arbor, MI 48105.

Hisun Motors Corp., U.S.A. Limited Warranty on Emission Control System

YOUR WARRANTY RIGHTS AND OBLIGATIONS

Hisun Motors Corp., U.S.A. warrants that each new off-road vehicle:

A. is designed, built and equipped so as to conform at the time of initial retail purchase with all applicable regulations of the United States Environmental Protection Agency, and

B. is free from defects in material and workmanship which cause such vehicle to fail to conform to applicable regulations of the United States Environmental Protection Agency for the periods specified above.

I. Coverage. Warranty defects shall be remedied during customary business hours at any authorized HISUN dealer located within the United States of America in compliance with the Clean Air Act and applicable regulations of the United States Environmental Protection Agency. Any part or parts replaced under this warranty shall become the property of HISUN.

II. Limitations This Emission Control System Warranty shall not cover any of the following:

A. Repair or replacement as a result of

(1) accident,

(2) misuse,

(3) repairs improperly performed or replacements improperly installed, unless performed by a HISUN authorized dealer,

(4) use of improper replacement parts or accessories not conforming to specifications set forth by HISUN, which adversely affect performance and/or

(5) Use in competitive racing or related events.

B. Inspections, replacement of parts and other services and adjustments required for required maintenance.

C. Any vehicle equipped with an odometer or hour meter on which the odometer mileage or hour meter reading has been changed so that actual mileage cannot be readily determined.

III. Limited Liability

A. The liability of HISUN under this Emission Control System Warranty is limited solely to the remedying of defects in material or workmanship by an authorized HISUN dealer at its place of business during customary business hours. This warranty does not cover inconvenience or loss of use of the vehicle or transportation of the vehicle to or from the HISUN dealer. HISUN shall not be liable for any other expenses, loss or damage, whether direct, indidental, consequential or exemplary arising in connection with the sale or use of or inability to use the vehicle for any purpose. Some states do not allow the exclusion or limitation of any incidental or consequential damages, so the above limitations may not apply to you.

Hisun Motors Corp., U.S.A. Limited Warranty on Emission Control System

B. No express emission control system warranty is given by HISUN except as specifically set forth herein. Any emission control system warranty implied by law, including any warranty of merchantability or fitness for a particular purpose, is limited to the express emission control system warranty terms stated in this warranty. The foregoing statements of warranty are exclusive and in lieu of all other remedies. Some states do not allow limitations on how long an implied warranty lasts, so the above limitations may not apply to you.

C. No dealer is authorized to modify this Limited Emission Control System Warranty issued by HISUN.

IV. LEGAL RIGHTS. This warranty gives you specific legal rights, and you may also have other rights which vary from state to state.

V. This warranty is in addition to the limited vehicle warranty.

VI. ADDITIONAL INFORMATION. Any replacement part that is equivalent in performance and durability may be used in the performance of any maintenance or repairs by the owner. However, HISUN is not liable for these parts. The owner is responsible for the performance of all required maintenance. Such maintenance may be performed at a service establishment or by any individual. The warranty period begins when the vehicle is placed into service.

If you have any questions regarding your warranty rights and responsibilities, you should contact Hisun Motors Corp., U.S.A., or the U.S. Environmental Protection Agency at 2000 Traverwood Drive, Ann Arbor, MI 48105.

Hisun Motors Corp., U.S.A.
310 E. University Drive
McKinney, TX 75069
Phone: 972-446-0760
Fax: 972-446-0765
Toll-Free: 877-838-6188

HISUN MOTORS CORP., U.S.A.

CALIFORNIA EVAPORATIVE EMISSIONS CONTROL WARRANTY STATEMENT
YOUR WARRANTY RIGHTS AND OBLIGATIONS

The California Air Resources Board and Hisun Motors Corp., U.S.A. (hereinafter "HISUN") are pleased to explain the evaporative emissions control system warranty on your 2020 off-highway recreational vehicle. In California, new off-highway recreational vehicles must be designed, built, and equipped to meet the State's stringent anti-smog standards. HISUN must warrant the evaporative emissions control system on your off-highway recreational vehicle for the periods of time listed below provided there has been no abuse, neglect, improper maintenance, or unapproved modification of your off-highway recreational vehicle.

Your evaporative emissions control system may include parts such as the carburetor or fuel-injection system, fuel tank, fuel hoses, carbon canister, and engine computer. Also included may be hoses, belts, connectors and other evaporative emissions-related assemblies. Where a warrantable condition exists, HISUN will repair your off-highway recreational vehicle at no cost to you including diagnosis, parts, and labor.

OHRV MANUFACTURER'S WARRANTY COVERAGE:

The warranty period for this off-highway recreational vehicle starts on the date of delivery to the ultimate purchaser and continues for a period of 30 months, or 2500 miles, or 250 hours, whichever comes first, except for "high-priced" warranty parts, which are covered for 60 months, or 5000 miles, or 500 hours, whichever comes first.

If any evaporative emissions-related part on your off-highway recreational vehicle is defective, the part will be repaired or replaced by HISUN.

OWNER'S WARRANTY RESPONSIBILITIES:

As the off-highway recreational vehicle owner you are responsible for the performance of the required maintenance listed in your owner's manual. HISUN recommends that you retain all receipts covering maintenance on your off-highway recreational vehicle but HISUN cannot deny warranty solely for the lack of receipts or for your failure to ensure the performance of a scheduled maintenance.

As an owner you are responsible for presenting your off-highway recreational vehicle to a HISUN dealer during customary business hours as soon as a problem exists. The warranty repairs should be completed in a reasonable amount of time, not to exceed 30 days. Any part or parts replaced under this warranty shall become the property of HISUN.

As an off-highway recreational vehicle owner, you should also be aware that HISUN may deny you warranty coverage if your off-highway recreational vehicle or a part has failed due to abuse, neglect, improper maintenance or unapproved modifications.

If you have any questions regarding your warranty rights and responsibilities, you should contact Hisun Motors Corp., U.S.A. at 1-xxx-xxx-xxxx or the California Air Resources Board at 9528 Telstar Avenue, El Monte, CA 91731.

LIMITED WARRANTY ON EVAPORATIVE EMISSIONS CONTROL SYSTEM:

HISUN warrants that each new HISUN brand off-highway recreational vehicle:

- is designed, built and equipped so as to conform, at the time of sale, with all applicable laws, rules and regulations;
- is free from defects in material and workmanship that may cause the failure of a warranted part for the periods specified below.

EVAPORATIVE EMISSION CONTROL SYSTEM WARRANTED PARTS:

Fuel Tank, Fuel Tank Cap, Fuel Line, Vapor Lines, Carbon Canister, Purge Control Valve, ECU (if it controls any of the evaporative emission system components); Miscellaneous: Hoses, clamps, fittings, connectors, plugs, etc. as related to the evaporative emission control system.

LIMITATIONS:

This Evaporative Emissions Control Warranty shall not cover any of the following:

- Repair or replacement as a result of
  - accident,
  - misuse/abuse,
  - repairs improperly performed or replacements improperly installed,
  - use of replacement parts or accessories not conforming to specifications set forth by HISUN, which adversely affect performance, and/or
  - use in competitive racing or related events.
- Inspections, replacement of parts and other services and adjustments required for required maintenance.
- Any vehicle equipped with an odometer or hour meter on which the odometer mileage or hour meter reading has been changed so that actual mileage cannot be readily determined.

LIMITED LIABILITY:
The liability of HISUN under this Evaporative Emissions Control System Warranty is limited solely to the remedying of defects in material or workmanship by an authorized HISUN dealer at its place of business during customary business hours. In the State of California only, evaporative emissions control system emergency repairs may be performed by any available service establishment, or by the owner, using any replacement part. An emergency situation occurs when an authorized HISUN dealer is not reasonably available, a warranted part is not available within 30 days, or a repair is not complete within 30 days. You will be reimbursed for expenses including diagnostic charges for such emergency repair or replacement, not to exceed HISUN's suggested retail price for all warranted parts replaced and labor charges based on HISUN's recommended time allowance for the warranty repair and the geographically appropriate hourly labor rate.

This warranty does not cover inconvenience or loss of use of the vehicle or transportation of the vehicle to or from the HISUN dealer. HISUN shall not be liable for any other expenses, loss or damage, whether direct, incidental, consequential or exemplary arising in connection with the sale or use of or inability to use the HISUN brand vehicle for any purpose. Some states do not allow the exclusion or limitation of any incidental or consequential damages, so the above limitations may not apply to you.

No express evaporative emissions control system warranty is given by HISUN, except as specifically set forth herein. Any evaporative emissions related components warranty implied by law, including any warranty of merchantability or fitness for a particular purpose, is limited to the express evaporative emissions control system warranty terms stated in this warranty. The foregoing statements of warranty are exclusive and in lieu of all other remedies. Some states do not allow limitations on how long an implied warranty lasts, so the above limitations may not apply to you.

No dealer is authorized to modify this Limited Evaporative Emissions Control System Warranty issued by HISUN.
This warranty gives you specific legal rights, and you may also have other rights which vary from state to state.
This warranty is in addition to the HISUN limited vehicle warranty.

888-405-8725
1775 E. University Dr. Tempe, AZ. 85281
www.colemanpowersportsusa.com

www.facebook.com/Colemanpowersportusa
www.instagram.com/colemanpowersports_usa